energies

IMPACT FACTOR 3.9

CITESCORE 8.3

Review

Electric Vehicle Charging Systems: Comprehensive Review

Aziz Rachid, Hassan El Fadil, Khawla Gaouzi, Kamal Rachid, Abdellah Lassioui, Zakariae El Idrissi and Mohamed Koundi

Special Issue

Challenges of Renewable Energy in Developing Countries

Edited by

Dr. Tariq Umar, Prof. Dr. Charles Egbu and Dr. Nnedinma Umeokafor

MDPI

https://doi.org/10.3390/en16010255

energies

MDPI

Review

Electric Vehicle Charging Systems: Comprehensive Review

Aziz Rachid [1,2], Hassan El Fadil [2,*], Khawla Gaouzi [2], Kamal Rachid [2], Abdellah Lassioui [2], Zakariae El Idrissi [2] and Mohamed Koundi [2]

[1] LSIB Laboratory, FST, Hassan II University of Casablanca, Mohammedia 28806, Morocco
[2] ASE Laboratory, ENSA, Ibn Tofail University, Kénitra 14000, Morocco
* Correspondence: elfadilhassan@yahoo.fr

Abstract: The high-voltage battery is a crucial element for EV traction systems. It is the primary energy source that must be regularly recharged to reach the autonomy declared by the manufacturer. Therefore, an EV charging system is required to ensure the battery charging process. This review thoroughly investigates the available EV charging technologies and the most popular batteries for EV applications. The contributions of this work can be summarized as follows: the classification and topologies of electric vehicle chargers are examined, an overview of the current EV charging standards is provided, the state-of-the-art of EV charging couplers is discussed, and the most widely used batteries in EV applications are reviewed.

Keywords: EV charging system; EV charger standards; bidirectional EV charger topologies; EV charging couplers; EV batteries classification; EV battery charge strategies

check for updates

Citation: Rachid, A.; El Fadil, H.; Gaouzi, K.; Rachid, K.; Lassioui, A.; El Idrissi, Z.; Koundi, M. Electric Vehicle Charging Systems: Comprehensive Review. *Energies* **2023**, *16*, 255. https://doi.org/10.3390/en16010255

Academic Editors: Tariq Umar, Charles Egbu and Nnedinma Umeokafor

Received: 25 November 2022
Revised: 20 December 2022
Accepted: 21 December 2022
Published: 26 December 2022

Copyright: © 2022 by the authors. Licensee MDPI, Basel, Switzerland. This article is an open access article distributed under the terms and conditions of the Creative Commons Attribution (CC BY) license (https://creativecommons.org/licenses/by/4.0/).

1. Introduction

1.1. Motivation

Due to the demand for decreasing CO_2 emissions and improving fuel efficiency, research and development of electric vehicles (EVs) are being revitalized worldwide. These vehicles can be a substitute for fuel-powered vehicles [1]. Truthfully, electric vehicles can provide a great option to lessen the environmental effect of transportation and decrease energy dependence due to their low power consumption and no local emissions [2,3].

In this context, markets for electric vehicles and their number on the road have been overgrowing since 2010, as illustrated in Figure 1. In 2018, the worldwide EV fleet surpassed 5.1 million, nearly twice the record-breaking number of new registrations in 2017 [4,5]. At the end of 2019, the worldwide EV fleet, including light vehicles, stood at 7.5 million [6–8]. In 2020, the global EV fleet exceeded 10 million, up by 43% since 2019. Especially two-thirds of the stock and all new electric car registrations were battery electric vehicles (BEVs) [9,10]. In 2021, EV sales hit a new high. They nearly doubled to 6.6 million, bringing the overall number of EVs on the road to more than 16.5 million [11]. After a few years of stasis, China's sales increased by three times compared to 2020, where they hit 3.3 million, and by two-thirds year over year in Europe, where they reached 2.3 million. More than 85% of worldwide EV sales in 2021 came from China and Europe, where they more than doubled from 2020 to reach 630,000 EVs, followed by the United States with 10% [12,13]. From this perspective, Figure 1 illustrates the global EV fleet from 2010 to 2021, while Figure 2 shows EV sales and market share worldwide from 2016 to 2021.

One of the key findings from the data provided by the European Automobile Manufacturers Association (ACEA) is that EVs are gaining ground more generally in Europe. Accordingly, Figure 3 shows the annual growth of new passenger car registrations according to their engine type in the EU from 2018 to 2021 [14]. However, in the European Union, new EV registrations increased from 5.9% (2019) to 37.6% (2021). Simultaneously, we see a general decrease in petrol engine sales (from 36.7% to 19.6%) and in diesel engine sales (from 55.6% to 40.0%) [15,16].

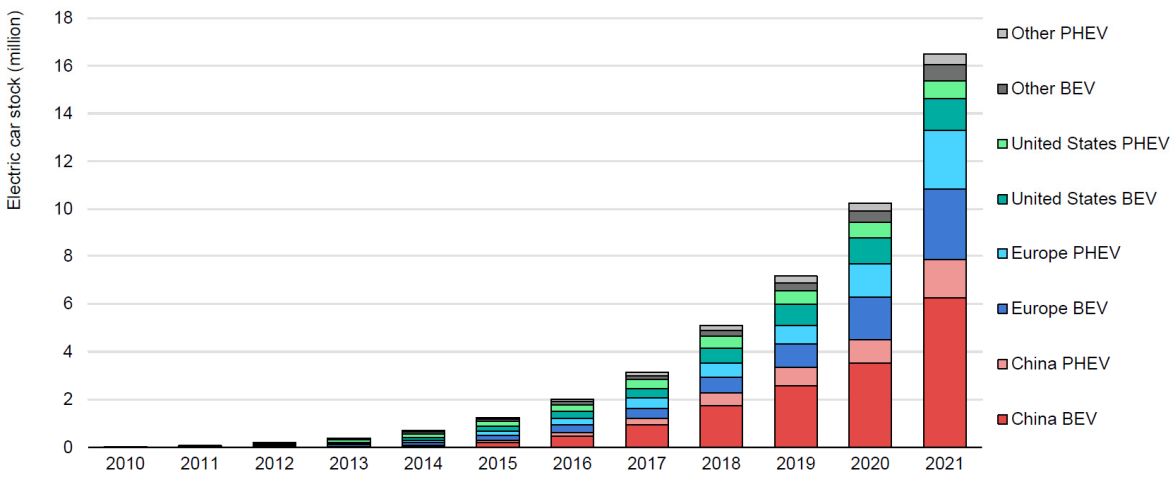

Figure 1. Global electric vehicles fleet from 2010 to 2021.

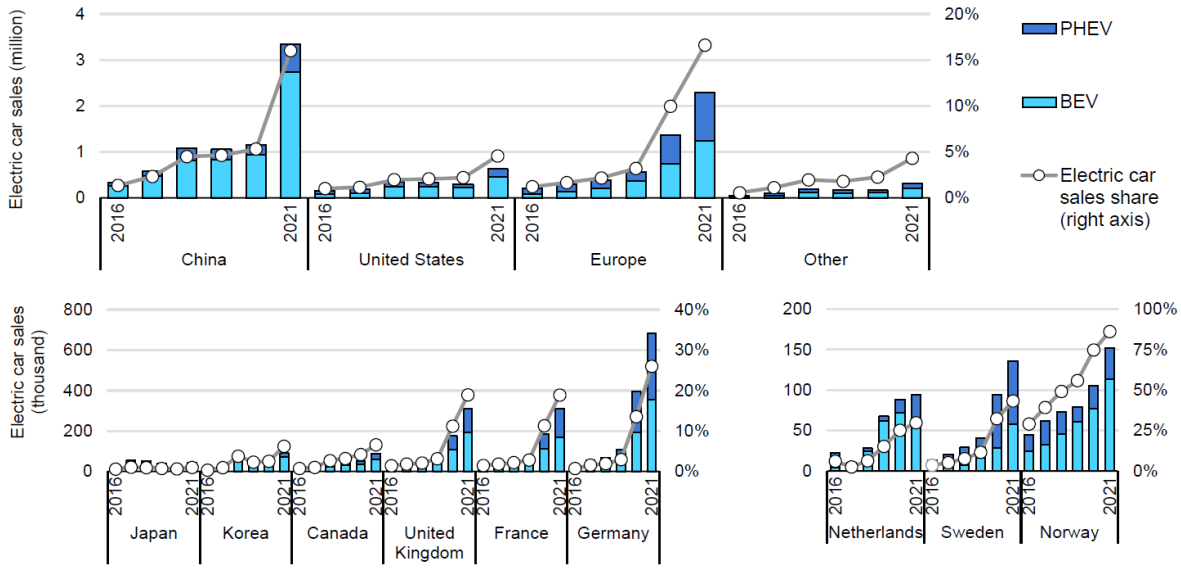

Figure 2. EV sales and market share worldwide from 2016 to 2021.

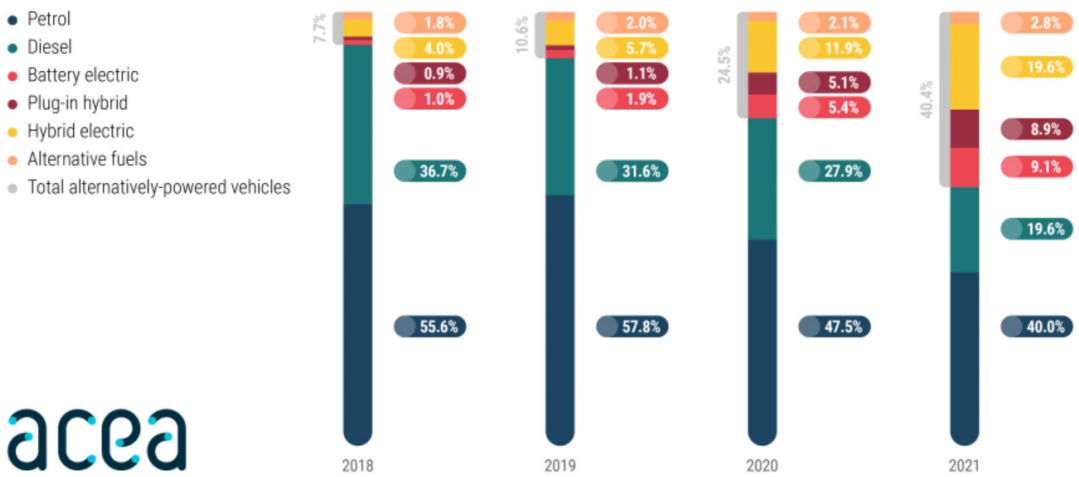

Figure 3. Market share of new vehicles in the EU by fuel type from 2018 to 2021.

In contrast, energy storage is a cornerstone of international climate and energy agreements. However, even though a lot of renewable energy is available, it is rarely stored [17]. By effectively tackling the problem of keeping this clean energy, we could hasten the transition to an emissions-free society while avoiding significant expenditures on the smart grid [18,19]. From this perspective, electric vehicles can play a particularly fascinating role due to their ability to retain a substantial volume of electrical energy in their battery packs, which may later be used to improve the electricity network [20,21]. This energy exchange between EVs and the electricity network, known as vehicle-to-grid (V2G), could be one of the main concepts in the forthcoming generation of power grids [22]. As shown in Figure 4, the term implicitly covers both energy directions: the grid-to-vehicle (G2V) is known as battery charging operation, and the V2G is known as battery discharging operation [20]. Thus, during V2G, the EV interacts automatically with the smart grid to exploit the energy stockpiled in the battery in favor of the electricity network during peak consuming periods [23,24].

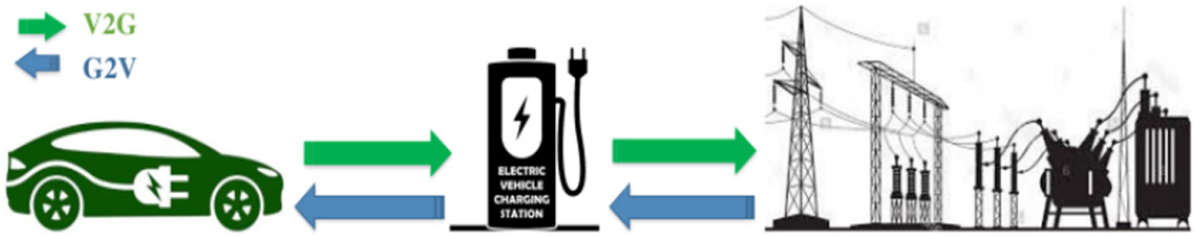

Figure 4. G2V & V2G Energy flow.

When there is a power outage, the EV battery can be directly utilized as an emergency power source for household electrical loads. This EV bidirectional charging mechanism is called the vehicle-to-home (V2H) technology [25,26]. These V2G, V2H, and other capabilities, such as vehicle-to-building (V2B, when an EV can provide services to a building's electrical installation) or, more likely, vehicle-to-load (V2L, e.g., to supply electric loads at a camping site), are referred to as vehicle-to-everything (V2X) [27,28]. Figure 5 illustrates this functionality as the most promising electromobility technology for empowering energy exchanges between EVs and their environs [29]. This energy exchange can be performed using bidirectional EV chargers embedded in vehicles or at EV charging stations.

1.2. Paper Novelties

This paper comprehensively reviews the current EV charging systems and the most commonly used batteries in EV applications. Typically, an EV charging system consists of a charging point, a charging coupler, an on-board charger, and a battery pack. A management and control system in compliance with a set of standards available in many regions and countries (e.g., North America, Europe, Japan, China, and others in the rest of the world) ensures the communication and energy transfer between these different pieces of equipment. Furthermore, the charging and discharging processes are carried out using different strategies.

In summary, the novelties of this work are listed in the following:

- An EV charger's classification and topologies review are performed. Accordingly, the EV charger's classification is addressed, and each type of EV charger is briefly described. Then, the focus is placed on the available EV charger topologies. Particularly, bidirectional structures are highlighted, and the available topologies are compared;
- An overview of the available EV charging standards is given. American SAE J1772 standard, European IEC 61851 standard, and Chinese GB/T standards are mainly presented. The related EV charging modes/levels are described, and their specifications are listed.
- A state-of-the-art in EV charging coupler is addressed. Therefore, the SAE J1772 coupler, the IEC type 2 coupler, the combined charging system (CCS) coupler, the

CHAdeMO coupler, the GB/T coupler, and the Tesla coupler are described. Rated parameters and pinouts of each coupler are also given;

- A review of the most used batteries in EV applications is fulfilled. First, a classification of EV batteries is accomplished. Finally, the battery terminologies and the most well-known battery-charging methods are described.

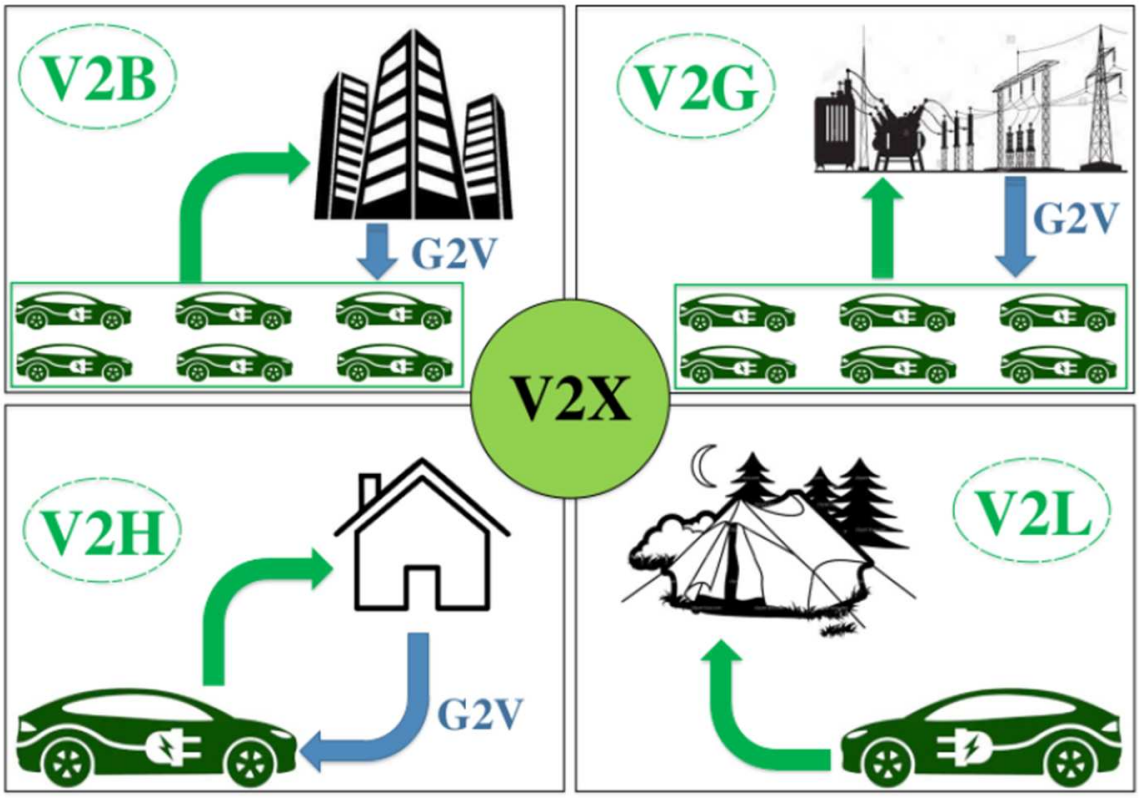

Figure 5. The topology of V2X technology.

1.3. Paper Organization

The rest of the paper is organized as follows: A classification and topologies review of EV chargers is performed in Section 2. An overview of the available EV charging standards is given in Section 3. Section 4 addresses the state of the art of an available EV charging coupler. In Section 5, a review of the most used batteries in EV applications is fulfilled. Finally, a conclusion and references end this review.

2. Classification and Topologies of EV Charger

2.1. EV Chargers Classification

The high-voltage battery (HVB) is vital for EV traction systems. It is the primary energy source that must be regularly recharged to reach the autonomy declared by the manufacturer. Thus, an EV charging system is required to ensure the battery charging process. This vital component, based principally on power conversion stages, allows the electrical energy transfer between the power grid and EV batteries. Therefore, these EV chargers can be classified according to several criteria, including the charger location, the energy transfer direction, the charger structure, the connection type, and the number of power conversion stages [30,31]. Accordingly, the options for each classification type are described in Table 1.

Table 1. EV charging systems classification.

EV Chargers	Description
Offboard chargers	All the components required for the EV charging and discharging process are inside the public EV charging station [32,33].
On-board chargers	Some components required for the battery-charging process are embedded inside the EV.
Unidirectional chargers	The electrical energy transfer is one-way from the EV charging station to the EV battery. Therefore, only the G2V operation mode is possible.
Bidirectional chargers	The electrical energy flow can be from or to the EV battery. Thus, V2X technology can be ensured by this type of charger [34].
Dedicated chargers	All equipment making up the charger is exclusively utilized to guarantee the EV charging or discharging process.
Integrated chargers	When the EV is linked to the electricity network, the traction system constituents (Motors, inverters, etc.) are used to guarantee the EV charging or discharging process [35].
Conductive chargers	A dedicated electrical cable links the EV to the electricity network.
Wireless Power Transfer Chargers [36]	It is a contactless charging technology. No cables are utilized between the EV and the electricity network [37]. Instead, the electrical energy transfer is based on electromagnetic induction [38]. Figure 6 illustrates the concept of this EV charger type [39]. Compared with conductive chargers, these inductive chargers present various advantages [40]. Especially the convenience for the user and the intrinsic galvanic insulation, while the cost and the need for custom hardware inside the EV are the main drawbacks [41,42].
Single-stage & Dual-stage chargers	The first one consists of a single power conversion: only one ac-dc or one dc-dc power converter. The second one involves double power stages: ac-dc and dc-dc power conversions.

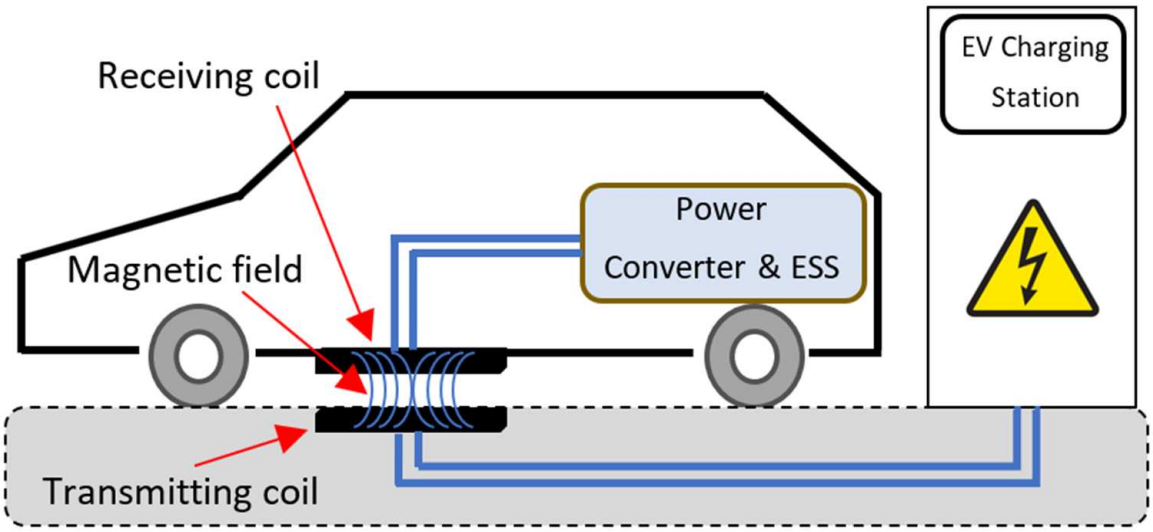

Figure 6. EV wireless charger overview diagram.

2.2. EV Charger Topologies

The available EV charger topologies are highlighted in this section [43]. Especially the bidirectional conductive on-board dedicated structures are highlighted. A review of other charger topologies, including off-board [44], unidirectional, integrated [35,45], and inductive EV chargers, can be found in [46–48]. A bidirectional EV charger typically consists of one or two power conversion stages, which are required to guarantee G2V or V2G operation modes. Therefore, various bidirectional EV charger topologies are possible by combining different ac-dc and dc-dc power conversion stages in a single or dual-stage structure with or without galvanic isolation [22,49]. Accordingly, Figure 7 illustrates available structures which can be implemented for EV charger applications [50,51].

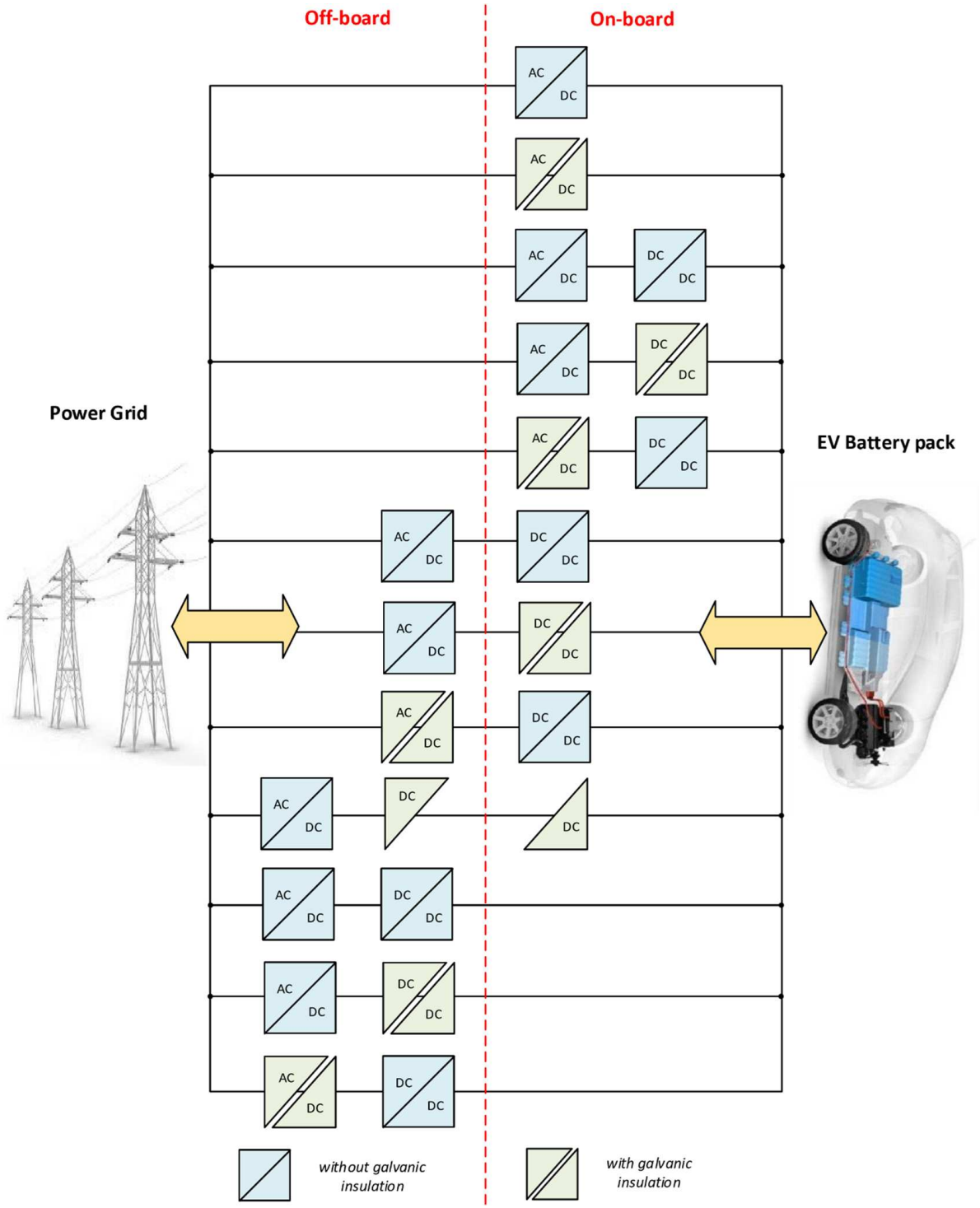

Figure 7. Possible structures for EV charger solutions.

In the dual-stage case, a bidirectional EV charger includes a dc-dc power stage following an ac-dc one. The first performs a power factor control (PFC) function and provides a regulated high dc-bus output voltage. In contrast, the second connects the EV battery to the high dc-bus voltage and ensures the energy exchange during G2V and V2G modes. In the G2V mode, the reversible ac-dc stage functions as a boost power rectifier with a unity power factor (UPF), whereas the bidirectional dc-dc converter works in buck mode to ensure the EV charge operation [52]. In V2G mode, the reversible ac-dc stage functions as a power inverter with a possible reactive energy injection into the electricity network,

whereas the bidirectional dc-dc stage starts operating in a boost converter to ensure the energy exchange from the EV battery to the dc-bus [23,53]. In the single-stage case, the EV charger has only one ac-dc or one dc-dc stage [19,54]. In the first one, the power converter ac-dc makes it possible to charge and discharge the EV battery with a power factor control at the grid side. The charger is supplied in AC by the EV charging station. The second one guarantees the battery-charging and the battery-discharging operations by the dc-dc stage. However, the power factor control is ensured on the EV charging station side, in addition to supplying the charger in DC [55]. Various circuitries are commonly used to perform bidirectional ac-dc or dc-dc power conversion stages with half-bridge or full-bridge power converters. The half-bridge structure is less expensive and has fewer elements but high component stresses. In contrast, the full-bridge stage has more components and is more costly but has lower component stresses. In addition to the control and management system (CMS) intricacy and cost, the full-bridge topology needs more pulse width modulation (PWM) control signals [47].

Figure 8 shows the electrical schematics of the commonly used bidirectional ac-dc power conversion stage in EV chargers. Figure 8a shows a bidirectional half-bridge single-phase ac-dc power converter. Figure 8b shows a bidirectional full-bridge single-phase ac-dc power converter [54,56]. Figure 8c shows a bidirectional three-phase ac-dc power converter. Finally, Figure 8d shows a bidirectional three-level diode-clamped ac-dc power converter [57]. It is worth noting that bidirectional multilevel three-phase ac-dc power converters are recommended for high-power EV chargers [58]. These converters afford a high level of energy quality with a high-power factor, low total harmonic distortion (THD) rate, and lessened electromagnetic interference noise on the grid side. Besides, they offer a high level of dc voltage that is ripple-free, tightly regulated, and impervious to load and source disturbances on the dc-side [59].

Figure 9 shows the most used dc-dc power circuitry for EV charging applications with V2X technology. However, Figure 9a illustrates a non-isolated bidirectional half-bridge dc-dc power converter, while Figure 9b presents its interleaved version. Figure 9c illustrates an isolated bidirectional dual-active bridge (DAB) dc-dc power converter, while Figure 9d shows its contactless version. It is a structure used for bidirectional inductive EV chargers; the left bridge is situated in the EV charging station, while the right one is embedded into the vehicle [60].

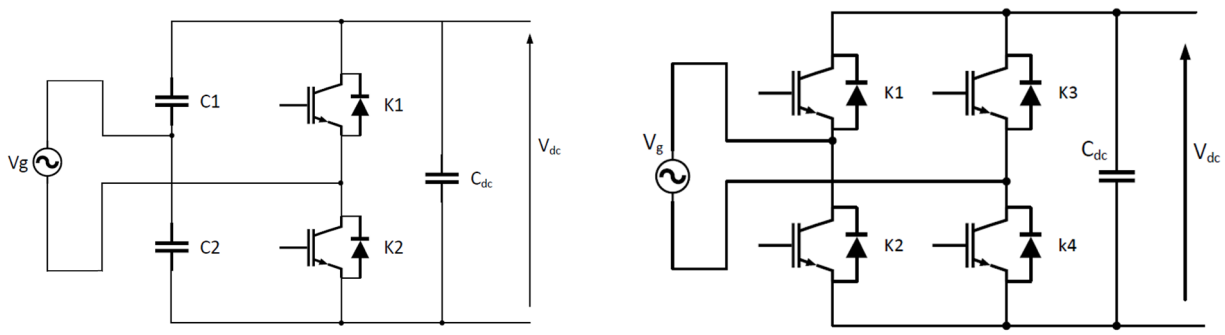

(**a**) (**b**)

Figure 8. *Cont.*

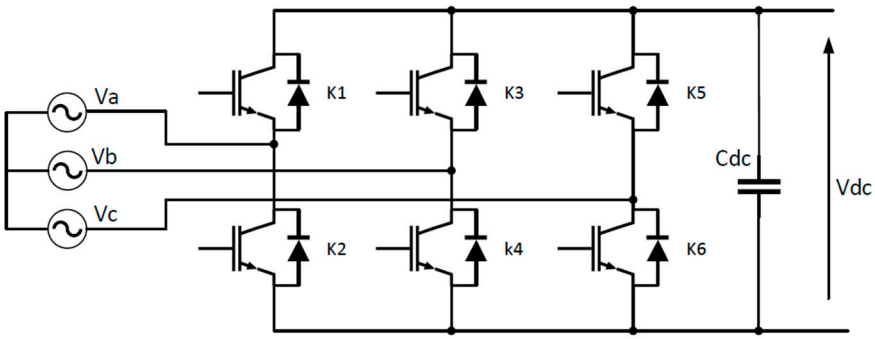

(**c**)

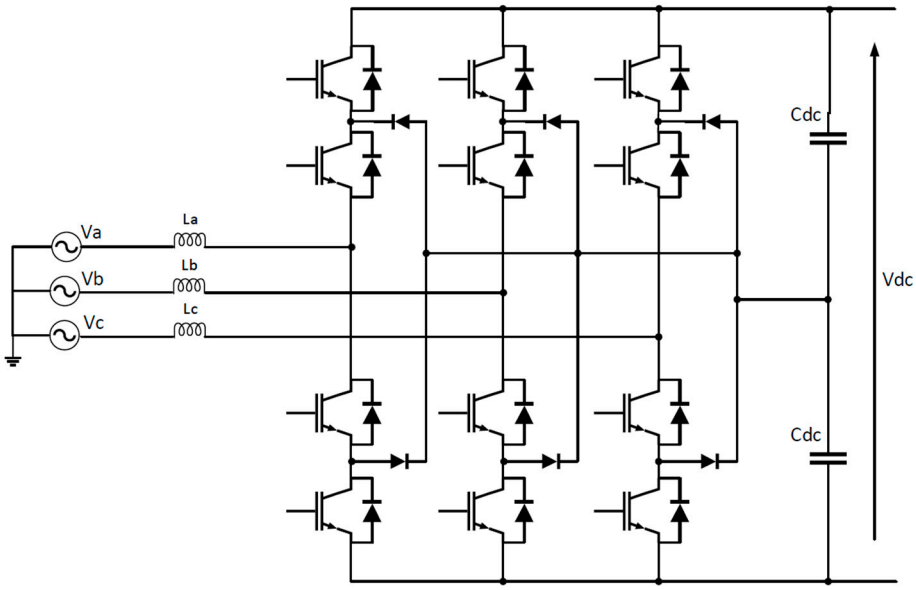

(**d**)

Figure 8. The electrical schematics of the commonly used bidirectional ac-dc power conversion stage in EV chargers: (**a**) Bidirectional half-bridge single-phase ac-dc power converter; (**b**) Bidirectional full-bridge single-phase ac-dc power converter; (**c**) Bidirectional three-phase ac-dc power converter; (**d**) Bidirectional three-level diode-clamped ac-dc power converter.

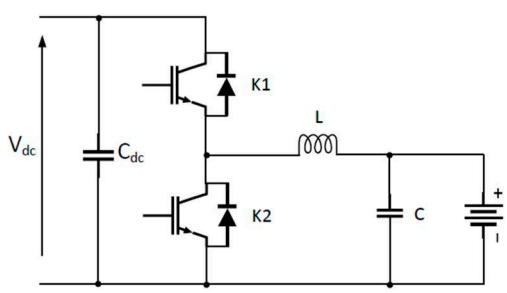

(**a**)

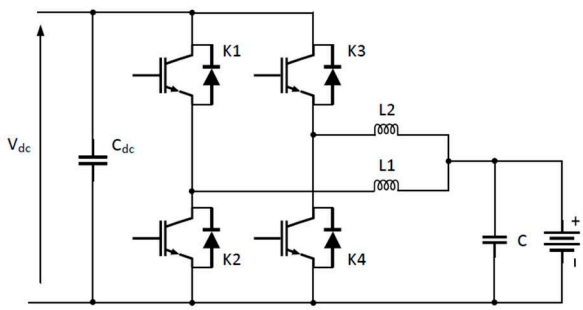

(**b**)

Figure 9. *Cont.*

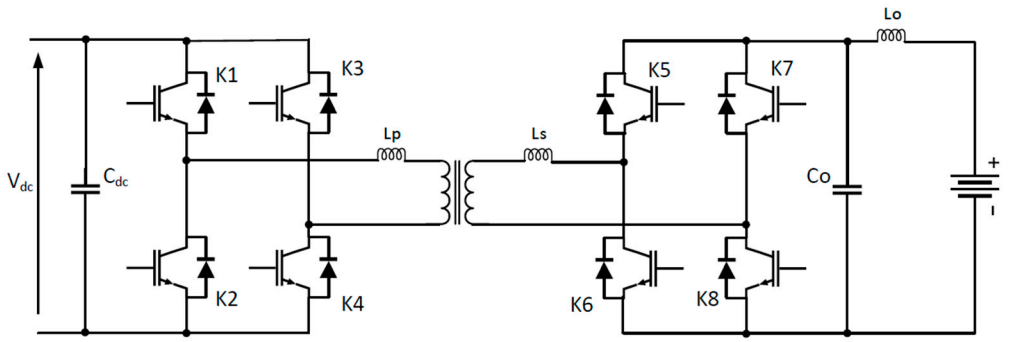

(**c**)

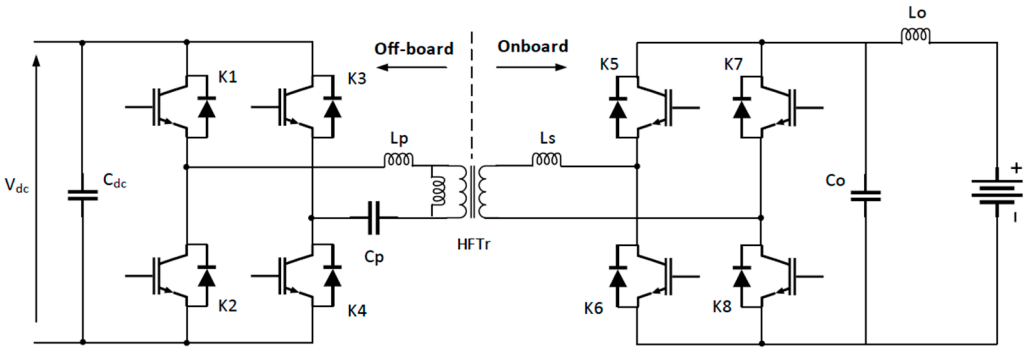

(**d**)

Figure 9. The electrical schematics of the most used dc-dc power conversion stage in EV chargers with V2X technology: (**a**) non-isolate bidirectional half-bridge dc-dc power converter; (**b**) Bidirectional interleave dc-dc power converter; (**c**) Isolated bidirectional dual-active bridge dc-dc power converter; (**d**) Inductive bidirectional dual-active bridge dc-dc power converter.

Several techniques have been used to control these ac-dc power converters in order to ensure the transfer of electric energy from and to the power grid. In [20], the problem of controlling a full-bridge single-phase ac-dc power converter for BEV chargers was considered. Based on the nonlinear model of the studied system, a nonlinear controller was designed using the Lyapunov approach. The control objectives were twofold: Ensuring a UPF on the grid side and regulating the dc-bus voltage. The effectiveness of the proposed nonlinear controller was confirmed using numerical simulations. In [54], the authors dealt with modeling and controlling a dc-dc power converter stage for BEV chargers. After modeling the studied system, an output feedback controller was designed using LQR technique control. The constant current-constant voltage (CC-CV) strategy was used to ensure the EV battery charging operation. In [61], the problem of controlling the half-bridge power converter has been addressed. The control objectives were: ensuring a satisfactory PFC at the power grid side and guaranteeing a tight regulation of the DC bus voltage. Accordingly, a dual-loop nonlinear adaptive controller has been designed using the backstepping technique. The inner loop ensures the PFC objective and involves an adaptive observer estimating the power grid voltage and impedance parameters. However, the outer loop regulates the DC-bus voltage. In [53], the authors focused on modeling and controlling a single-phase on-board V2G BEV charger. The latter consists of a bidirectional dual-stage combining an ac-dc power converter and a dc-dc power converter interfacing with an EV battery. After system modeling, a nonlinear controller was elaborated using a backstepping design technique. The point is that the battery's internal voltage is not accessible for measurement. Therefore, a Kalman-like observer was invoked to estimate all non-measured variables making the solution cheaper and noiseless. In [62], a bidirectional single-phase EV charger was proposed with the aim of its integration into V2H applications. It is a dual-stage charger that can supply home appliances during power grid outages. The controller design

was carried out using improved voltage control based on a predictive control strategy. Furthermore, the main control objective, i.e., ensuring an off-line uninterruptible power supply (UPS) during the V2H operation mode, was experimentally validated. In [63], a novel architecture of a bidirectional off-board EV fast charger was presented. It is a dual-stage structure composed of a three-phase ac-dc power converter associated with a dc-dc power converter via a dc-link. The studied system was controlled to ensure the battery charging/discharging process and the active/reactive energy exchanges during the G2V and V2G operation modes. Furthermore, the design of the proposed controller has been performed using the conventional PI controller combined with $\alpha\beta$ transformation. In [64], a bidirectional single-phase dual-stage EV charger was considered. It comprises a full-bridge ac-dc power converter and a bidirectional dc-dc power converter. The first one is controlled using the classical PI regulator combined with a DQ transformation to regulate the reactive power Q, while the second is controlled to regulate the active power P, also using a PI controller. In both operation modes, G2V and V2G, the energy transfer is ensured by controlling the P and Q powers in all four quadrants of the P-Q plane. A corresponding charger prototype was carried out, and the proposed controller was experimentally validated. In [23], the problem of modeling and controlling a three-phase dual-stage structure BEV charger was addressed in modes G2V and V2G. A nonlinear observer was proposed to estimate the battery's state of charge, and a backstepping technique combined with a Lyapunov approach was used to design a nonlinear controller. Furthermore, a comparison with a fuzzy logic-based PI controller was accomplished using simulation scenarios, which clearly illustrate the supremacy of the proposed nonlinear controller.

3. EV Charging Standards Overview

ISO, IEC, and SAE international standards, which include a full set of classifications and regulations covering everything from charging connectors to charging device topologies, have already been established in Europe and North America to govern the EV charging process thoroughly [65]. An overview of these available standards in Europe, North America, Japan, and China is given in the following subsections [66–68].

3.1. SAE J1772 Standard

SAE J1772 is a standard published by SAE International that encompasses the general physical, electrical, functional, and quality criteria for EVs' conductive charging process in North America [69]. This standard provides available conductive charging methods for EVs and electric vehicle supply equipment (EVSE), including the operational, functional, and dimensional requirements for the vehicle inlet and mating connector [70]. In addition, the SAE International terminology "Charging Levels" is utilized to classify the rated currents, voltages, and powers of the charging systems currently offered in North American markets [71,72]. Accordingly, the October 2017 revision of the SAE J1772 standard outlines four charging levels: AC Level 1, AC Level 2, DC Level 1, and DC Level 2 [65]. Table 2 lists and describes their charging configuration settings and ratings [73]. SAE J1772 AC Level 1 charging presumes that the EV can be charged at home or in the office parking lot using a conventional wall outlet. The power supply is an AC single-phase with power up to 1.9 KW (120 V @ 16 A). SAE J1772's AC Level 2 charging also assumes that the EV has an on-board charger and also the supply is a single-phase AC with a nominal voltage of 240 V that can provide up to 80 A of current and up to 19.2 KW of power. The AC Level 2 charging is also available for residential installation using a wall box. Still, it is more commonly performed at workplaces or public parking areas by linking the EV to an EV charge point. Typically, available AC charging powers are 3.3 KW, 7 KW, and 20 KW [74,75]. SAE J1772 defines two DC fast-charging levels: DC Level 1 and DC Level 2, with power up to 80 kW and 400 kW, respectively [76]. As shown in Table 2, each DC Level assumes that the on-board charger is bypassed and that the charging station directly supplies the EV battery with a DC voltage using a DC connector [72,74].

Table 2. Levels charging available in SAE J1772 (2017) configuration.

Charging Level	Specifications
AC Level 1	- EV includes an on-board charger - AC Single-phase Supply from a household outlet: • 120 V @ 12 A ⇒ 1.44 KW • 120 V @ 16 A ⇒ 1.92 KW - Estimated charge-time for 1.92 KW: • PHEV: 7 h (SOC 0% to 100%) • BEV: 17 h (SOC 20% to 100%) [1]
AC Level 2	- EV includes an on-board charger - 208–240 V AC Single-phase - Supply from residential installation or EVSE - Charging power up to 19.2 KW (Typ. 7.2 KW) - Charging current up to 80 A (Typ. 30 A) - Estimated charge-time for 3.3 KW: • PHEV: 3 h (SOC 0% to full) • BEV: 7 h (SOC 20% to full) - Estimated charge-time for 7 KW: • PHEV: 1.5 h (SOC 0% to full) • BEV: 3.5 h (SOC 20% to full)
DC Level 1	- EVSE output voltage: 50–1000 V DC - Charging power up to 80 KW (Typ. 50 KW) - Charging current up to 80 A (Typ. 50 A) - Estimated charge-time for 50 KW: • PHEV: 10 min (SOC 0% to 80%) • BEV: 20 min (SOC 20% to 80%)
DC Level 2	- EVSE output voltage: 50–1000 V DC - Charging power up to 400 KW (Typ. 50 KW) - Charging current up to 400 A (Typ. 50 A) - Estimated charge-time for 100 KW: • BEV: < 10 min (SOC 20% to 80%)

[1] BEV battery capacity is presumed to be 25 KWh, while that of PHEV is 5–15 KWh.

3.2. IEC 61851 Standard

In Europe and other countries, the IEC uses the terminology "Charging modes" to classify the methods of power distribution and protection installation, as well as the communication and management of the EV charging system [77]. Accordingly, as illustrated in Figure 10, the international standard IEC 61851-1 published in 2017 describes four distinct EV charging modes [78].

These charging modes are described below, and their main parameters are listed in Table 3 [79]:

- Mode 1 (also known as Schuko mode) relates to charging an electric vehicle from a standard household socket using a basic extender cable without protective equipment. Furthermore, this standard domestic socket is protected using a slow fuse, making this charging mode extremely unsafe. For that reason, the Schuko charging mode is strongly discouraged in many parts of the world.
- Mode 2 relates to charging an electric vehicle from a standard domestic socket augmented with a control and protection system installed inside the cable (well-known as in-cable control and protection device (IC-CPD)). Compared to Mode 1, this charging option is far less dangerous. Nevertheless, the charging capacity will be constrained by the maximum power of the socket outlet.

- Mode 3 relates to adequately controlled and protected dedicated AC charging stations. It's the usual charging mode worldwide, with a power range from 3.7 kW to 43 kW.
- Mode 4 is the DC charging mode. The public EV charge point directly supplies DC voltage to the EV battery pack. Therefore, the EV on-board charger is bypassed.

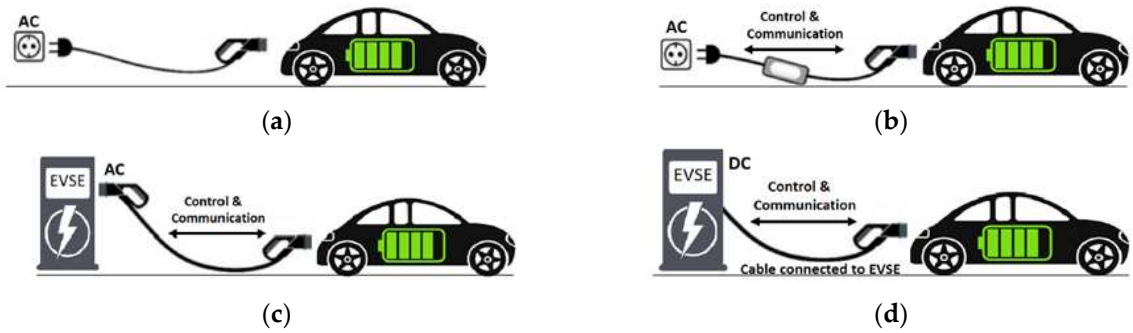

Figure 10. IEC 61851-1 Charging Modes: (**a**) Mode 1; (**b**) Mode 2; (**c**) Mode 3; (**d**) Mode 4.

Table 3. Specifications of the IEC 61851 charging modes.

Charging mode	Specifications
Mode 1	- AC charging via on-board EV charger - Non-dedicated power socket (household outlet) - Simple cable without protection - Unsafe (Risk of overheating) - Not recommended to use
Mode 2	- AC charging via on-board EV charger - Non-dedicated power outlet - Cable with in-cable control and protection device (IC-CPD) - Charging power up to: • 3.7 KW (230 V @ 16 A) in residential use • 7.4 KW (230 V @ 32 A) in industrial use
Mode 3	- Single or three-phase AC supply from EVSE - EV includes an on-board charger - Dedicated cable and dedicated power socket - The EVSE includes control, communication, and security features - Charging power up to 43 KW - Typical charging powers: • Single-phase: 3.7 KW and 7.4 KW • Three-phase: ○ 11 KW (400 V @ 16 A) ○ 22 KW (400 V @ 32 A) ○ 43 KW (400 V @ 63 A)
Mode 4	- DC supply from the EVSE - Dedicated cable fixed in the EVSE - The EVSE includes control, communication, and security features - The EV on-board charger is bypassed - For public and commercial charging applications - Charging power up to 400 KW (1000 V @ 400 A)

3.3. China GB Standards

The China GB (Guo Biao) standards are mandatory or recommended. Mandatory standards, like other technical regulations in China, have legal force. They are regulated by legislation and authoritative rules to protect public health, private property, and safety. All

standards that do not meet these criteria are deemed recommended (i.e., Quasi-Mandatory standards). GB standards are classified as Mandatory or Recommended based on their prefix code. GB is a mandatory standard, whereas GB/T is a recommended standard [80]. Table 4 summarizes the GB/T standards concerning the EV charging systems implemented in China.

Table 4. Overview of GB/T standards for EV charging system.

Standard Code	GB Standard Title
GB/T 20234.1-2015	- Connection set for EVs conductive charging - Part 1: General requirements
GB/T 20234.2-2015	- Connection set for EVs conductive charging - Part 2: AC charging coupler
GB/T 20234.3-2015	- Connection set for EVs conductive charging - Part 3: DC charging coupler
GB/T 27930-2015	- Protocols for communication between off-board conductive chargers and the EV battery management system
GB/T 28569-2012	- Metering of electric energy for EV AC charging stations
GB/T 29317-2012	- EV charging/battery swap infrastructure terminology
GB/T 29318-2012	- Metering of electric energy for EV off-board chargers
GB/T 38775-2020	- EV wireless power transfer

4. State of the Art of EV Charging Couplers

This section addresses an overview of the available EV charging couplers. Ideally, it would be efficient to have all EVs equipped with the same charging inlet and can be connected to any charging station [81]. Unfortunately, this is not the case. EV charging inlets vary by geographic region and model, as shown in Table 5 [82–84]. Thus, several couplers have emerged: SAE type 1, Mennekes Type 2, CCS Combo, Japan CHAdeMO, China GB/T, Tesla supercharger, and the High Power ChaoJi [83,85]. The following subsections cover all of these charging systems.

4.1. SAE J1772 Coupler

The Yazaki manufacturer produced the SAE J1772 coupler in 2009 with full respect to the SAE J1772-2009 standard. Its specifications were later stated to the IEC 62196-2 standard in May 2011 (i.e., IEC Type 1 coupler). It's widely utilized for AC charging systems in the United States, Canada, and Japan. It accepts a single-phase AC power supply and can charge up to 19.2 kW (240 V @ 80 A). Figure 11 shows the EV J-plug and its corresponding EV Inlet [86].

Table 5. EV charging Inlet classifications by region.

Countries	EU	North America	Japan	China	Tesla
AC	Type 2 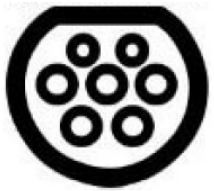 IEC 62196-2	Type 1 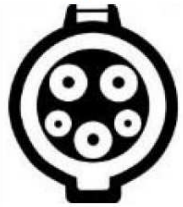 SAE J1772 / IEC 62196-2		GB/T AC GB/T 202034.2	
DC	CCS Combo 2 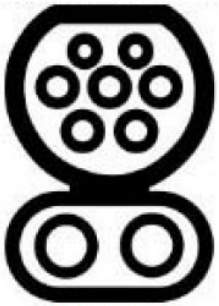 SAE J1772 IEC 62196-3	CCS Combo 1 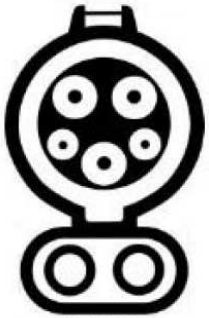 SAE J1772 IEC 62196-3	CHAdeMO IEC 62196-4	GB/T DC GB/T 202034.3	Tesla AC/DC Used only in North America
			High Power ChaoJi 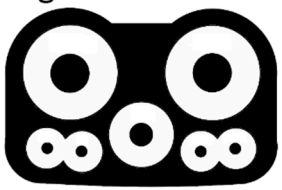		

Figure 11. The SAE J1772 EV charging coupler: EV Plug (**Left**) and Inlet (**Right**).

As illustrated and described in Figure 12, this connector has a circular 43.8 mm (1.72″) diameter with five pins of three different sizes. The proximity pilot (PP) is a proximity detection pin that communicates with the EV's control system, allowing it to restrict movement while linked to the EVSE and signaling the latch release button to the EV. The control pilot (CP) pin is a communication signal. It is used between the EV and the EVSE to communicate the charging level, initiate the charging process, and send other data. The EVSE generates a 1 kHz square signal on the control pilot line at ±12 V. This signal is used to check whether an EV is present, transmit the authorized limits of the charging current, and manage the charging begin/end process. Figure 13 illustrates the electrical signaling circuit in a J1772 [87].

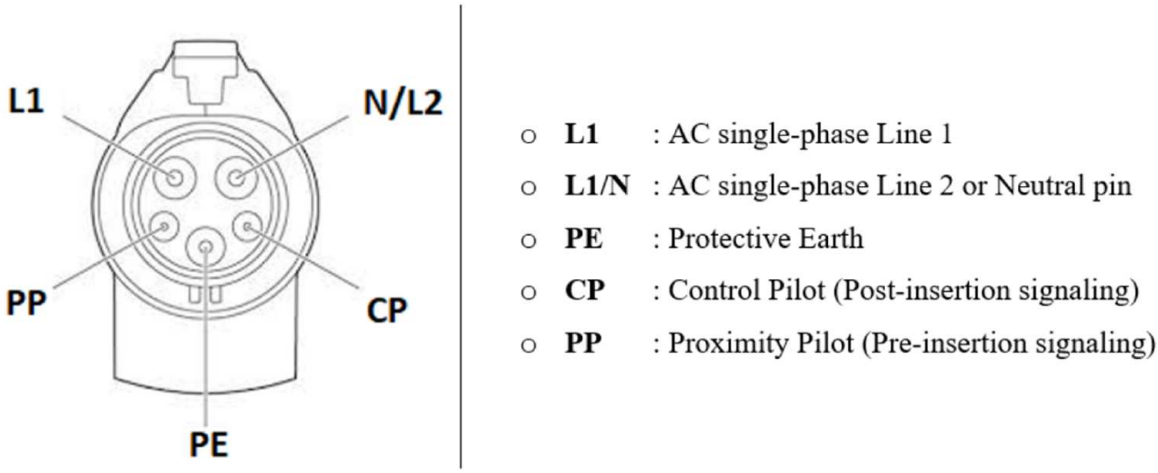

Figure 12. Pinout of the SAE J1772 Plug.

4.2. IEC Type 2 Coupler

The type 2 coupler had first been proposed by the German manufacturer "Mennekes" in 2009, and it is still commonly referred to as such (i.e., Mennekes Type 2). In January 2013, the European Commission designated it as an official charging coupler in the EU. Some other countries outside the EU, including Australia and New Zealand, are adopting the same coupler, while the Chinese standard GB/T 20234-2 outlines a similar but unique design. As is described in the IEC 62196-2 standard, this coupler was initially designed for AC charging systems. That means it can support a power-charging up to 7.4 kW (230 V @ 32 A) or 43 kW (400 V @ 63 A) from a single-phase or three-phase AC power supply,

respectively [82,88,89]. Technically, the Mennekes Type 2 coupler can adopt three different configurations, as presented in Table 6, but only the first one is used in the EU [90].

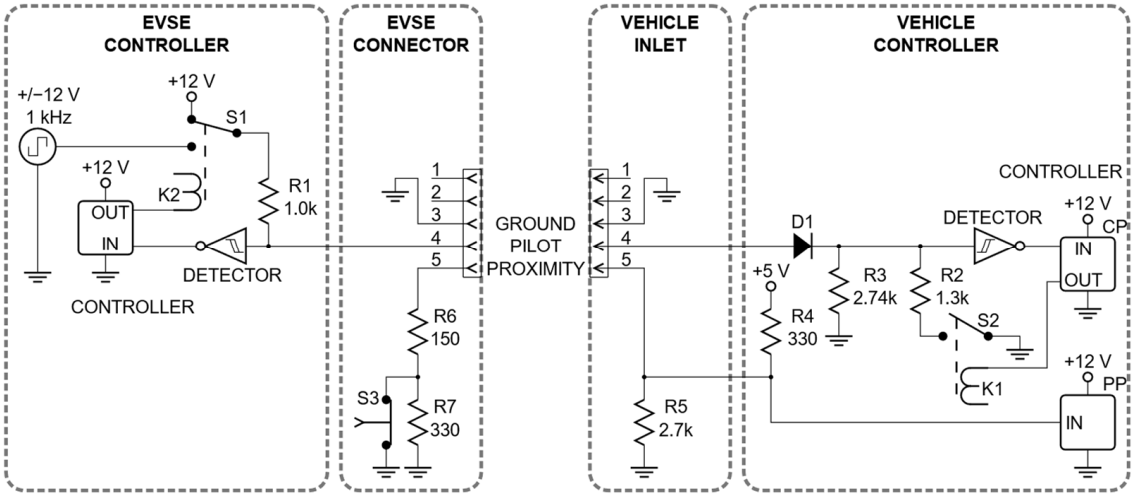

Figure 13. Signaling circuit in a J1772 interface.

Table 6. AC and DC available configurations of Type 2 EV Inlet.

Configuration	Supply Type Max.	Voltage @ Max. Current
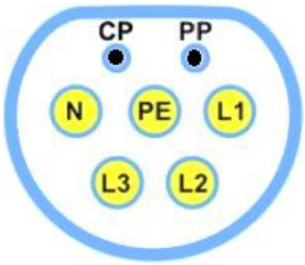	Single-phase AC	500 V @ 1 × 70 A
	Three-phase AC	500 V @ 3 × 63 A
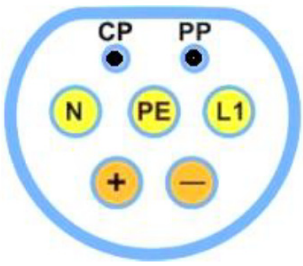	DC-Low	500 V @ 70 A
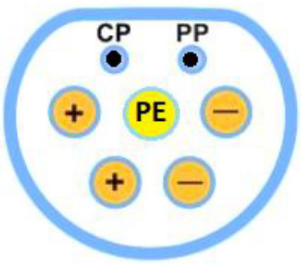	DC-Mid	500 V @ 2 × 70 A

The IEC type 2 is a circular 70 mm (2.8″) diameter connector with a flat side to facilitate mechanical alignment, as seen in Figure 14a. Its pinout is shown in Figure 14b. Some public EV charge points in Australia, New Zealand, Europe, and other regions have a charging

cable, whereas others only feature a socket outlet. Accordingly, Figure 14c shows a "type 2-to-type 2" cable required to charge the EV [81].

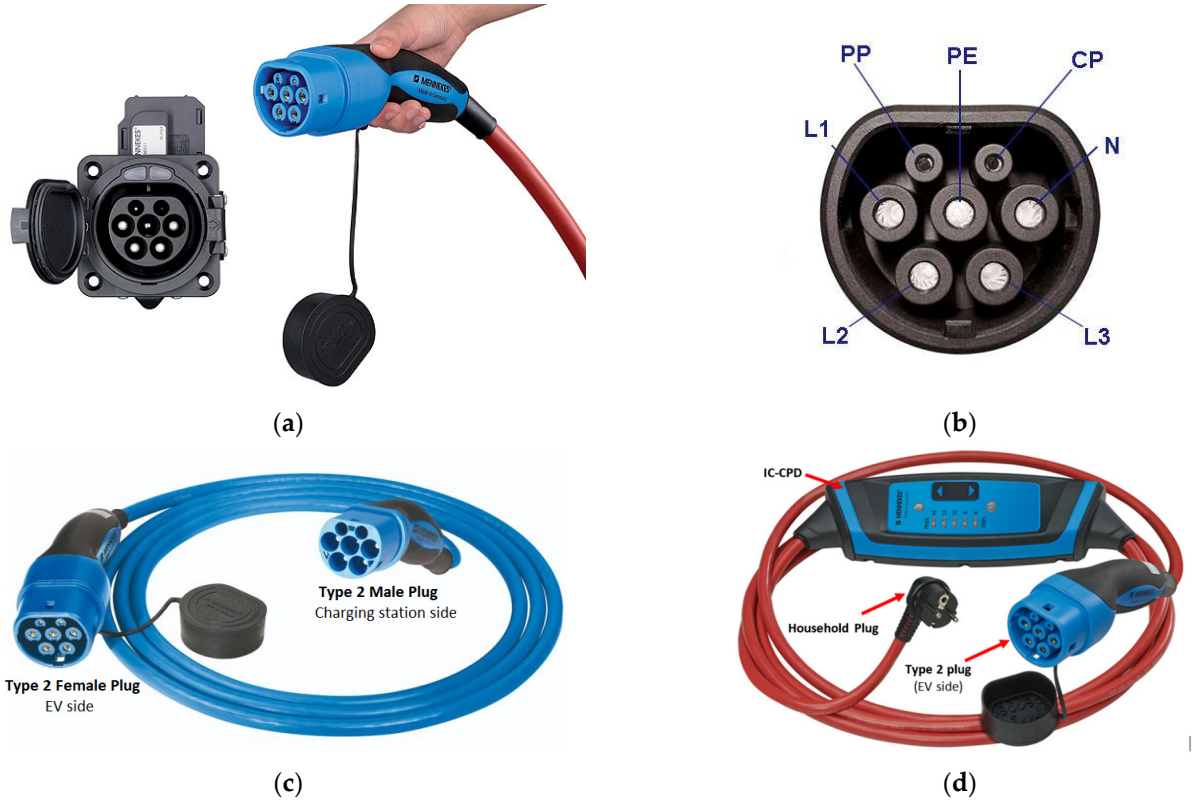

Figure 14. The type 2 EV coupler and associated devices: (**a**) Type 2 EV charging coupler: EV Inlet (Left) and EV Plug (Right); (**b**) Pinout of the Type 2 EV Plug; (**c**) Type 2-to-Type 2 Charging cable; (**d**) The Mennekes Type 2 portable EVSE.

Besides, each EV is delivered with a portable EVSE. It is an EV charging cable equipped with in-cable control and protection device (IC-CPD) and a Schuko plug, allowing AC charging via a household outlet. An example of this equipment with a type 2 EV plug and AC charging power up to 3.7 KW (230 V @ 16 A) is illustrated in Figure 14d. It was developed by Mennekes and Siemens and produced collaboratively [91]. Finally, Table 7 presents a non-exhaustive list of EVs compatible with the IEC Type 2 standard.

Table 7. The most common EV compatible with type 2 Standard.

	Battery Capacity (KWh)	Max. Charging Power	Charge Time	EV Inlets	Electric Range [1] (Km)
Renault Zoe 2 (2019)	52	AC ⇒ 22 KW DC ⇒ 50 KW	2 h 42 min 55 min	Combo CCS 2	390
Peugeot e-208	46	AC ⇒ 7 KW AC ⇒ 11 KW DC ⇒ 100 KW	7 h 30 min 4 h 47 min 24 min	Combo CCS 2	340
Opel Corsa-e (2020)	46	AC ⇒ 7.4 KW AC ⇒ 11 KW DC ⇒ 100 KW	7 h 06 min 4 h 47 min 24 min	Combo CCS 2	337
Nissan Leaf e+ (2019)	60	AC ⇒ 6.6 KW DC ⇒ 100 KW	10 h 23 min 32 min	Type 2 CHAdeMO	385
BMW i3	37.9	AC ⇒ 11 KW DC ⇒ 50 KW	3 h 56 min 37 min	Combo CCS 2	310
Tesla Model S	100	AC ⇒ 11 KW DC ⇒ 200 KW	9 h 52 min 26 min	Tesla EU [2]	610
Tesla Model 3 (2019)	75	AC ⇒ 11 KW DC ⇒ 250 KW	7 h 41 min 22 min	Combo CCS 2	560
Honda e (2020)	35.5	AC ⇒ 6.6 KW AC ⇒ 22 KW DC ⇒ 100 KW	6 h 09 min 1 h 51 min 17 min	Combo CCS 2	200

Note: Charging in AC mode is accomplished from 0 to 100% battery-rated capacity via a type 2 plug, while that in DC mode is done at 80% via CCS Combo 2 or CHAdeMO plug.[1] Worldwide harmonized Light Vehicles Test Procedures (WLTP) [92]. [2] A CCS Combo adapter is also proposed to access fast-charging stations other than Tesla superchargers.

4.3. CCS Combo Coupler

DC fast charging is also available in Europe, as it is in North America, where CCS Combo 2 is the standard utilized by almost all manufacturers except for Nissan and Mitsubishi [85]. It combines two DC-fast charging pins with the Type 2 connector in the same way that the CCS Combo 1 system (J1772 connector) does in the United States and Canada. As illustrated in Table 8, the CCS Combo standard covers the AC charging and the DC fast charging levels using a single EV inlet [93].

Table 8. CCS Combo Coupler specifications.

Region	Function	CCS Combo Coupler
Europe	AC charging with Type 2 EV plug	
	DC fast charging via dedicated pins with CCS Combo 2 EV plug	
North America	Single-phase AC charging with Type 1 EV plug	
	DC fast charging via dedicated pins with CCS Combo 1 EV plug	

The pinout of the CCS Combo 1 EV inlet is presented in Figure 15 [94], while the pinout of the CCS Combo 2 EV plug and inlet is illustrated in Figure 16 [95].

4.4. CHAdeMO Coupler

CHAdeMO is a DC fast-charging coupler for electric vehicles with a charging power ranging from 6 KW to 400 KW. Its coupler is shown in Figure 17, while Figure 18 illustrates its sequence circuit and pin layout [96]. There are ten (10) pins, and one of them is not connected (Pin #3). The sequence circuit establishes the exchanged parameters necessary during charging control. In addition, the EV and the DC fast-charging EVSE are equipped with terminating resistors for communications.

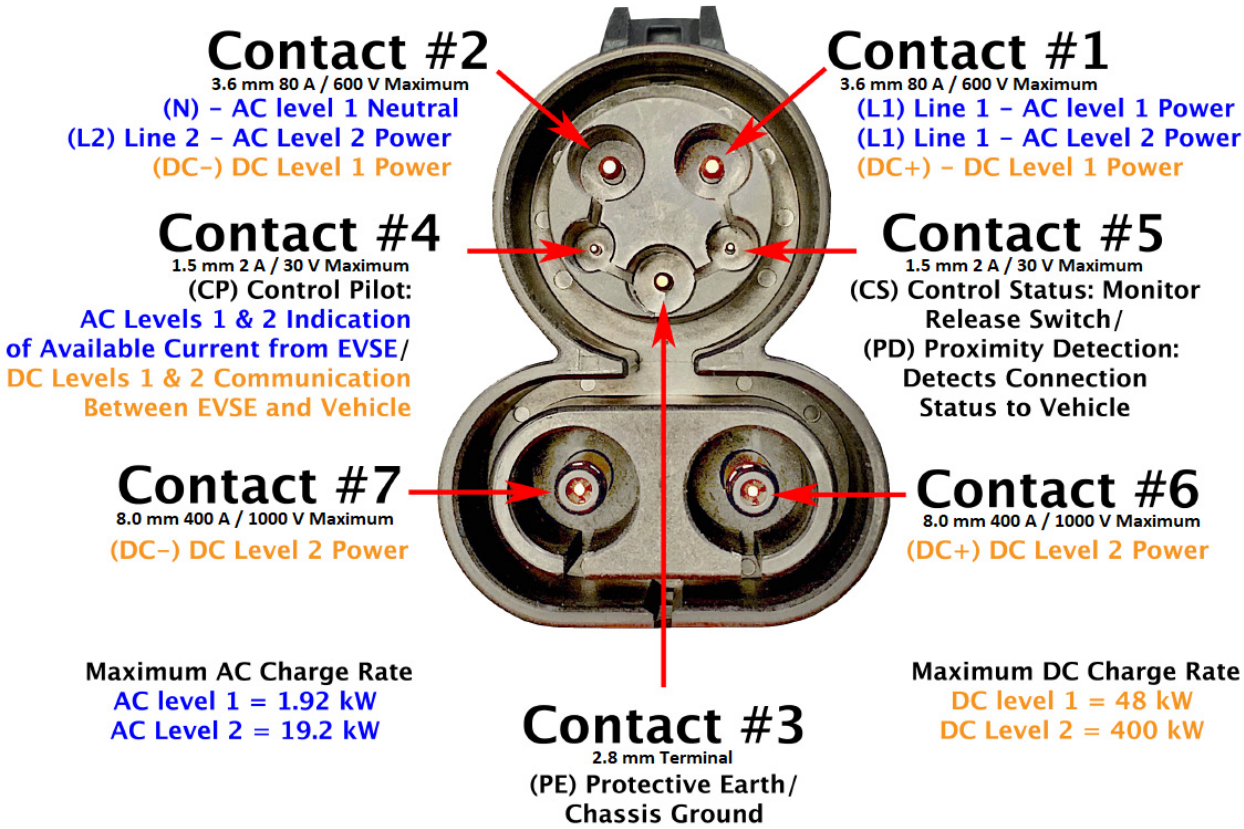

Figure 15. The pinout of the CCS Combo 1 EV inlet.

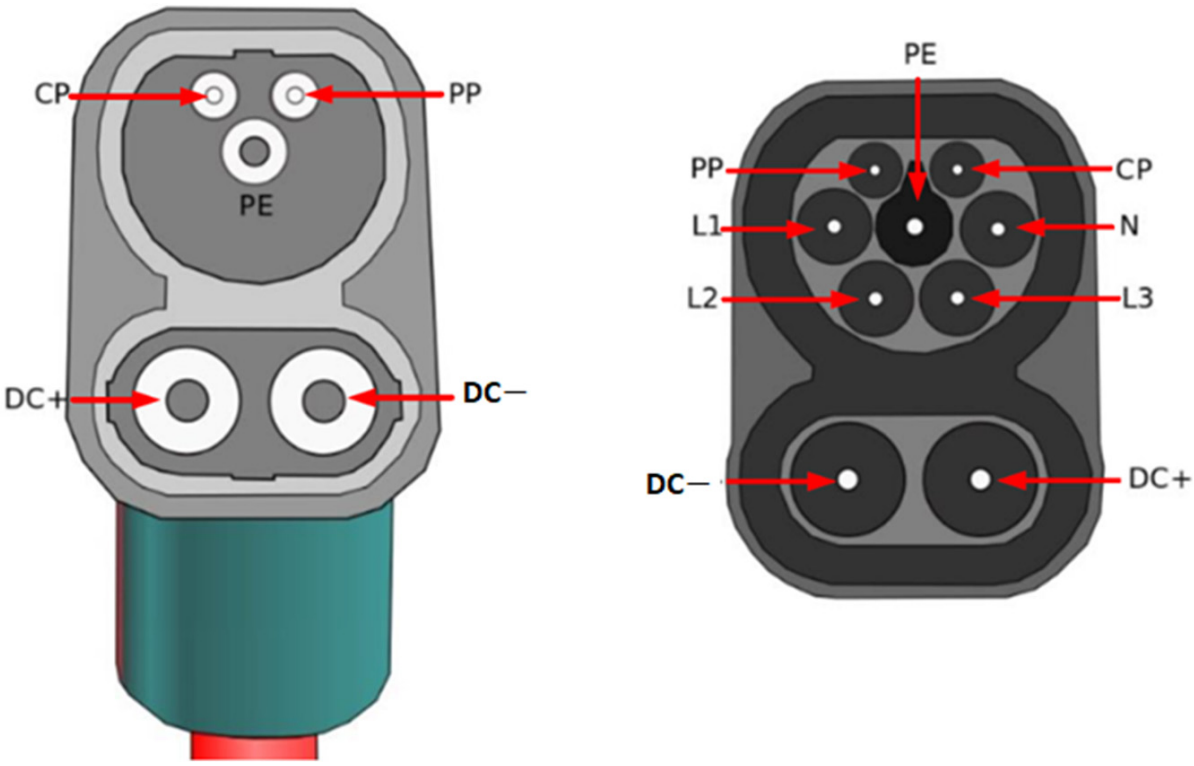

Figure 16. The pinout of the CCS Combo 2 coupler: EV Plug (**Left**) and Inlet (**Right**).

Figure 17. The CHAdeMO coupler: EV Plug (**Left**) and Inlet (**Right**).

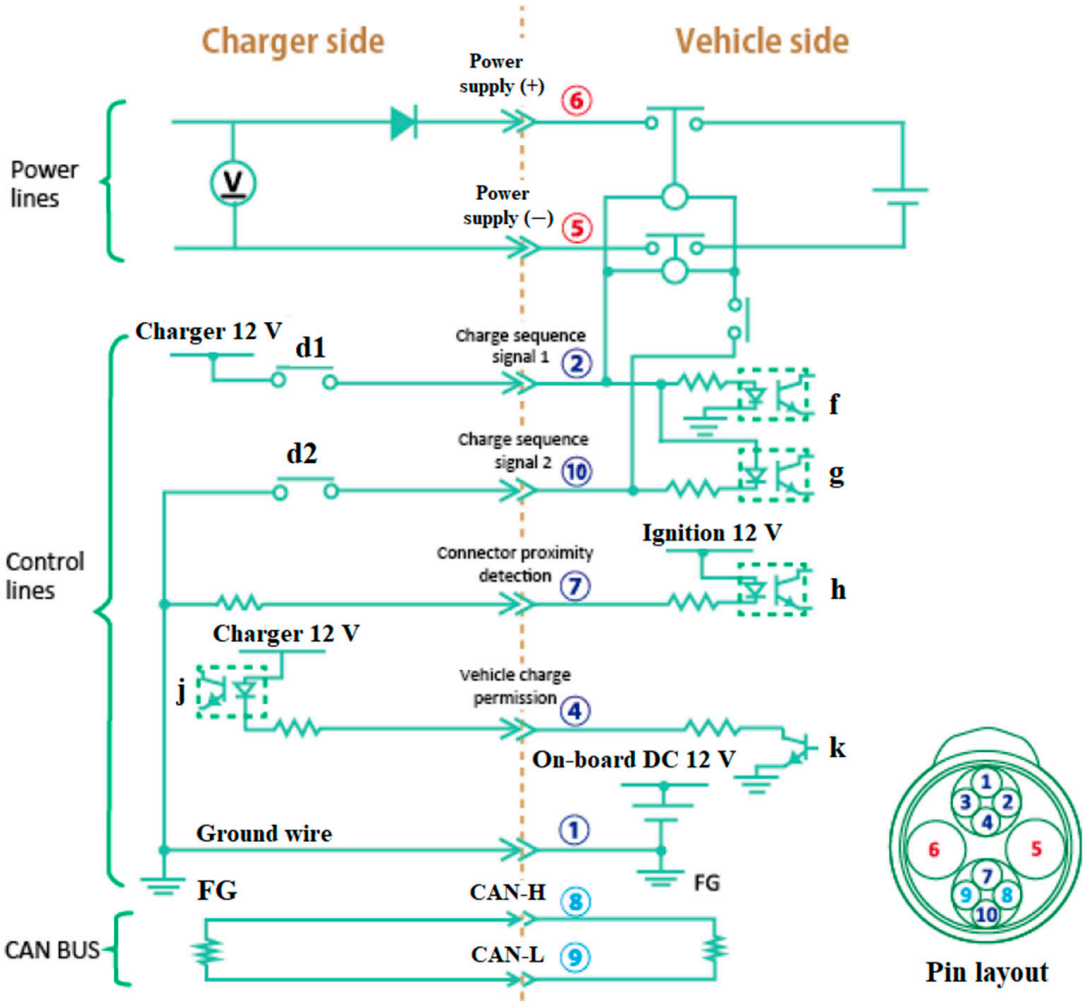

Figure 18. CHAdeMO sequence circuit and pin layout.

It's designed by the Japanese CHAdeMO Association, which is also in charge of certification, assuring compatibility between the EV and the charger. The Tokyo Electric Power Company, Mitsubishi, Nissan, and Subaru Corporation founded the CHAdeMO

association in 2010. Subsequently, Toyota joined. Figure 19 presents the timeline of this Japanese standard [97,98].

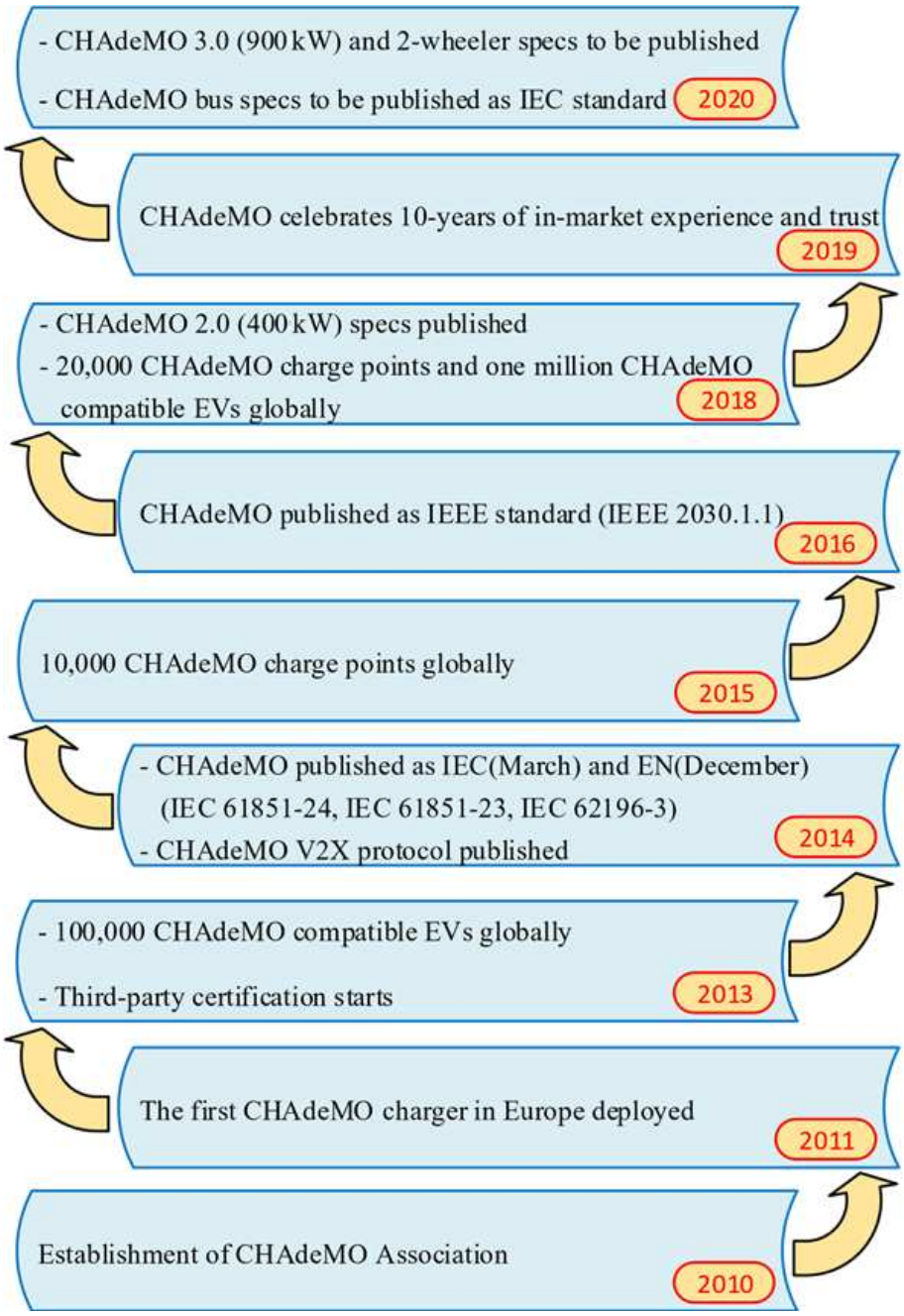

Figure 19. The timeline of the CHAdeMO Japanese standard.

In 2018, the CHAdeMO association and the China electricity council (CEC) started co-working to develop high-power next-generation EV charging standards, aiming at 900 kW of power. Its working title was ChaoJi or CHAdeMO 3.0, as illustrated in Figure 20 [99]. In 2020, the 350 - 400 kW EV charging was enabled, and the ChaoJi first charging tests and demonstration were accomplished (CHAdeMO 3.0 up to 600 A @ 1.5 kV) [100]. In 2021, the full specifications of ChaoJi 2 were announced (CHAdeMO 3.0). In 2022, ChaoJi 2 is scheduled to be published (CHAdeMO 3.0.1), and the IEC will receive proposals for the ChaoJi charging system and coupler (61851-23; 62196-3; and 62196-3-1). In 2023, ChaoJi 2

(CHAdeMO 3.0.1) field testing in Japan is planned, and Ultra-ChaoJi (CHAdeMO 4.0) will be deployed [101,102].

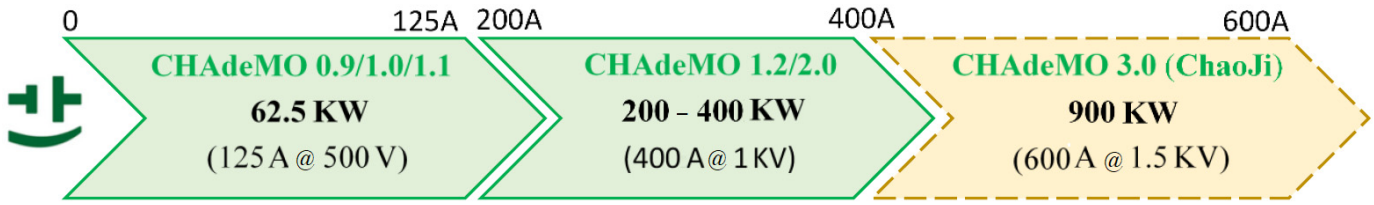

Figure 20. CHAdeMO standard specifications.

4.5. GB/T Coupler

In the EV charging infrastructure, China uses one connector for AC charging and another for DC charging, as in Table 5. Both infrastructures are governed by the GB/T 20234-2015 standard [103]. As shown in Table 9, Part 2 of this standard (i.e., GB/T 20234.2-2015) applies to AC charging couplers for EVs conductive charging with rated voltages up to 440 V, rated currents up to 63 A, and frequency of 50 Hz [104].

Table 9. Rated Values of Charging Coupler in the GB/T 20234 standard.

	Rated Voltage	Rated Current	Max. Power
AC Single-phase charging	250 V	10/16/32 A	8 KW
AC Three-phase charging	440 V	16/32/63 A	48 KW
DC Fast charging	700/1000 V	80/125/200/250 A	250 KW

The China AC charging standard (i.e., GB/T 20234.2-2015) defines cables with Type 2-style male connectors at both ends and female inlets on EVs as opposed to the rest of the world, as well as different control signaling [105]. The GB/T AC EV plug and inlet are shown in Figure 21, while their pinouts are illustrated in Figure 22.

Figure 21. The GB/T AC charging coupler: EV Plug (**Left**) and Inlet (**Right**).

Further, Part 3 of the GB/T 20234 standard covers the fundamental specifications, function definitions, type structures, parameters, and dimensions of DC charging couplers for EVs' conductive charging. As stated in Table 9, GB/T 20234.3-2015 (Part 3 of GB/20234) applies to vehicle couplers in charging Mode 4 and connection Mode C, with rated voltages and currents of up to 1000 V (DC) and 250 A (DC), respectively [106]. The GB/T DC EV

plug and inlet are shown in Figure 23, while their pinouts are illustrated in Figure 24, and finally, the function of each DC coupler pin is listed in Table 10 [107].

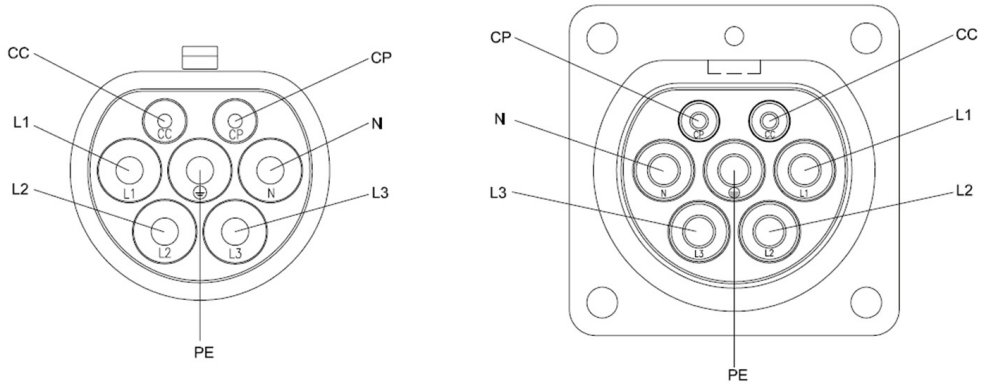

Figure 22. The GB/T AC Coupler pinout: EV Plug (**Left**) and Inlet (**Right**).

Figure 23. The GB/T DC charging coupler: Inlet (**Left**) and EV Plug (**Right**).

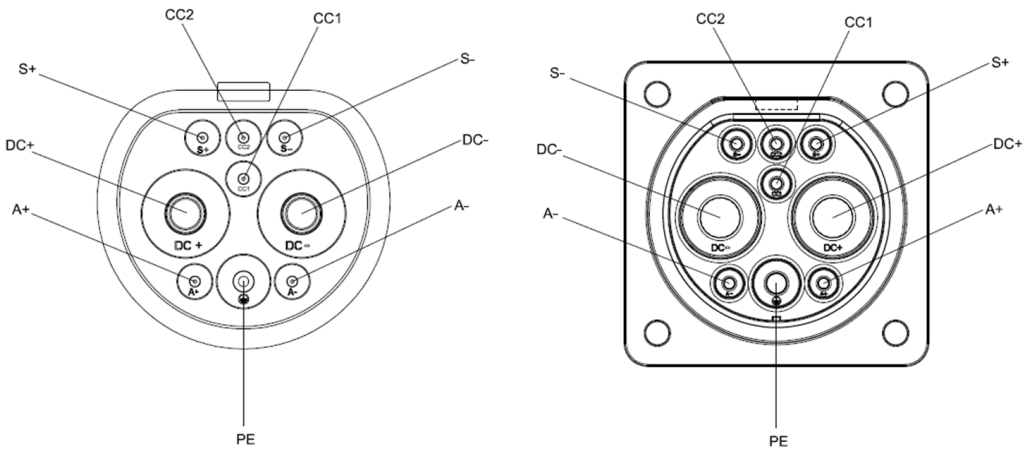

Figure 24. The GB/T DC Coupler pinout: EV Plug (**Left**) and Inlet (**Right**).

Table 10. GB/T 20234 DC Coupler pins functions.

Pin Ref.	Pin Function
DC+	DC Power supply positive
DC−	DC power supply negative
PE	Protective Earth (PE)
S+	Charging communication CAN_H
S−	Charging communication CAN_L
CC1	Charging connection confirmation 1
CC2	Charging connection confirmation 2
A+	Low-voltage auxiliary power supply positive
A−	Low-voltage auxiliary power supply negative

With the support of the governments of China and Japan, the CHAdeMO Organization and the China electricity council (CEC) have lately been working on a new international high-power DC charging standard that is backward compatible with existing CHAdeMO and GB/T standards. Figure 25 shows the new GB/T- CHAdeMO coupler prototype, which was revealed during the CHAdeMO general assembly with a charging power of up to 900 kW (1500 V @ 600 A) [101,108,109]. ChaoJi is the codename of the new EV charger standard. The ChaoJi standard, like its predecessors, will employ the controller area network (CAN) bus for EV charging communication [110,111]. Figure 26 illustrates how the results of this collaborative work would eventually lead to a single harmonized standard [112,113].

Figure 25. The ChaoJi coupler: EV Plug (**Left**), Inlet (**Middle**), and Inlet pinout (**Right**).

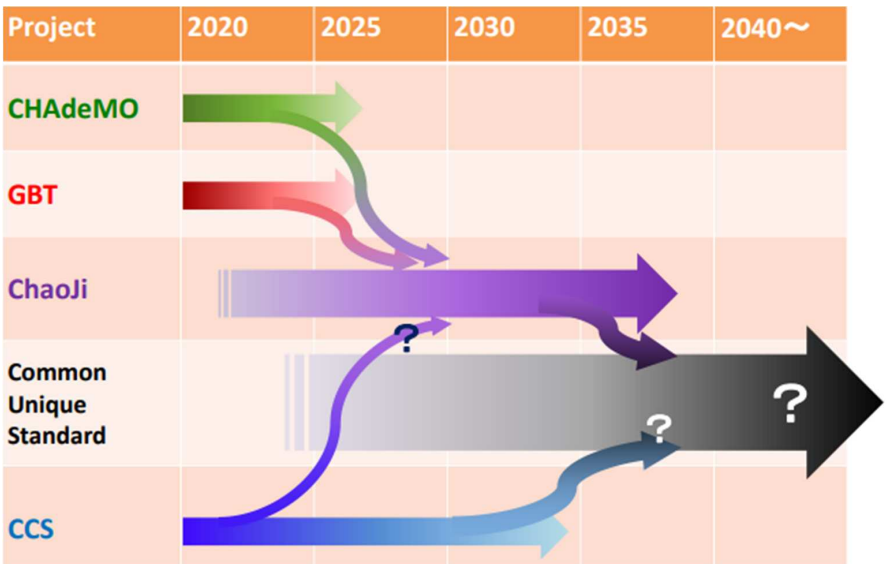

Figure 26. ChaoJi towards harmonization.

4.6. Tesla Coupler

Founded in 2003, Tesla is a California brand specializing in EVs and energy. After its first EV, the Roadster 2008, the manufacturer has four models within its range: The Model S, the Model 3, the Model X, the Model Y, and the new Roadster 2020. The type of the Tesla EV inlet depends on the region in which the vehicle is sold. Thus, the US version is also sold in Canada, Mexico, Japan, and Taiwan and is equipped with the proprietary Tesla inlet, as shown in Figure 27a. In contrast, Figure 27b illustrates that the Tesla vehicle sold in Europe is fitted with a Type 2 inlet or, more recently, a CCS Combo 2 inlet, as presented in Figure 27c. Finally, the Tesla vehicle in China is equipped with a dual inlet: AC GB/T and DC GB/T inlets, as shown in Figure 27d [81].

Figure 27. The Tesla EV inlet according to the region of sale: (**a**) US; (**b**) and (**c**) EU; (**d**) China.

The Tesla standard is also gaining ground by installing its proprietary EV charging stations worldwide, commonly the so-called Tesla Supercharger or Tesla Megacharger. These EV charging stations provide three charging speeds: trickle at 2.4 KW (120 V @ 15–20 A), medium at 19.2 KW (240 V @ 80 A), and fast at 144 KW (480 V @ 300 A) [114]. All these three levels and speeds are through a single interface, allowing driving ranges varying from 3 to 273 km per hour of charge [115]. Figure 28 illustrates the proprietary Tesla EV plug.

Figure 28. Tesla EV plug.

5. EV Batteries

Commonly, an EV is equipped with two types of batteries: a high-voltage battery called a traction battery and a low-voltage battery. The first is the principal energy source that supplies the electric traction motor via a three-phase power inverter. It is generally Lithium-ion based and can be charged using the ac-current through an on-board charger or directly using the dc-current provided by the dc fast-charging stations. However, a third charging technique called battery swapping makes it possible to exchange the drained battery with a charged one [66,116,117]. The second is a 12 V lead-acid battery that supplies the vehicle's auxiliary loads [118]. It is charged from the high-voltage battery through a dc-dc converter [119].

The high-voltage battery is made up of several individual cells that are grouped into modules. These are added to each other to form the final traction battery, as shown in Figure 29. The design of the battery cells varies depending on the vehicle manufacturer. In this case, the deciding factors are, e.g., energy density, heat dissipation, manufacturing cost, weight, modular adaptability, or mechanical stability. An anode (the negative pole), a cathode (the positive pole), and an electrolyte make up a battery cell [120]. The electrolyte is a conductive (liquid or solid) element that allows current flow between poles. Battery operation is based on using a pair of metals capable of exchanging electrons. Based on these metals, EV batteries will be classified in the next section.

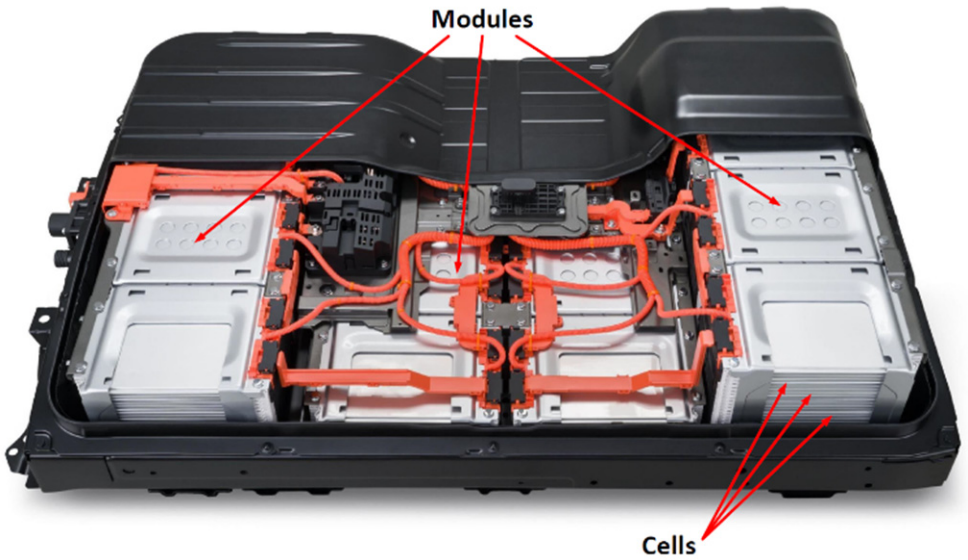

Figure 29. The high-voltage battery components.

5.1. EV Batteries Classification

In this subsection, the main types of batteries used by the EV industry are described, and their advantages/disadvantages are listed in Table 11 [121]. According to this classification, Li-ion batteries have excellent technical characteristics, which make them best suited to be used as traction batteries in EVs [118,120,122].

Table 11. The EV batteries classification.

EV Battery Type and Description	Advantages	Disadvantages
A lead anode and cathode are used in a lead-acid battery.	+ Easy to produce and lead is a wide- spread metal implying a low cost; + Ability to deliver a high current (used to start fuel engines).	- Lead is toxic and polluting even though it is relatively easily recycled; - Low energy density implies low electric range for an EV; - Limited lifetime of around 600 cycles.
Nickel-Cadmium (Ni-Cd) batteries are ubiquitous in the industry and have been used in some older EV projects.	+ Slightly higher energy density than lead-acid batteries (up to 80 Wh/kg); + Relatively inexpensive.	- Their significant memory effect makes their use restrictive; - Cadmium is very polluting and difficult to recycle.
Lithium batteries include many technologies that use lithium in different forms. These technologies are the most efficient today but are also very expensive. However, they appear to be gaining headway in the EV market [123]. Lithium-ion batteries (Li-ion) utilize lithium as ions inserted into the electrolyte. First marketed by Sony Energitech in 1991, it is increasingly used in EVs, from bicycles to buses.	+ The high energy density (150 Wh/kg to 200 Wh/Kg) and reduced weight; + Low self-discharge rate (less than 10% per year); + Long service life (around 1000 cycles); + No memory effect;	- Depth of discharge: these batteries age less quickly when they are recharged every 10% than when they are recharged every 80%; - Risk of explosion if all safety conditions are not met. To avoid this issue, the manufacturer must provide a security system: The battery management system [124].
The Lithium-phosphate batteries that appeared in 2007 used a cathode based on iron phosphate (LiFePo4).	+ Very stable cathode, which makes the battery safer (it does not release oxygen which is responsible for Li-ion battery explosions and fires); + Non-toxic, unlike cobalt; + Lower cost because it does not contain rare metals.	- Lower mass capacity; - Lower voltage requires more cells in series to make an EV traction battery.
Appearing in the early 2000s, Lithium-polymer batteries (Li-Po) use a solid electrolyte (gelled). They are now used on specific models of electrically assisted bicycles and cars.	+ Batteries that can take various forms or be placed on flexible supports; + Low weight (Li-Po sometimes eliminates the heavy metal envelope); + Safer than Li-ion (more resistant to overcharging and electrolyte leakage).	- Less efficient; - More expensive to produce; - Strict charging rules under penalty of ignition risk.
Since 2007, Lithium-Metal-Polymer technology (LMP) has been owned by the French group Bolloré.	+ Energy density is lower than lithium-ion, 110 Wh/kg; + Completely solid (no risk of explosion); + Low self-discharge; + No major pollutant in the accumulator composition; + No memory effect.	- Optimal operation at high temperature (85 °C); - No real feedback.

5.2. Battery Terminologies

The use field diversity of the batteries imposed several characteristic parameters, which help evaluate the performance of a battery type and select the most appropriate application field. Most terminologies used to describe the EV batteries' parameters, characteristics, and states are listed and described in the following:

- Rated Voltage: the reference voltage of a cell or battery, sometimes referred to as "Normal" voltage. It is the corresponding voltage at approximately 50% of the battery SOC.
- Cut-off voltage: the low voltage limit of a considered fully discharged battery that varies depending on the battery type and use.
- Open-circuit voltage (OCV) is the battery voltage measured at its terminals when it is not providing any current. The open-circuit voltage depends on the battery SOC and also on temperature.
- Rated Capacity (C_n (%)): the number of ampere-hours (Ah) that a battery in a single discharge can provide. The total amount of Ah is available when a battery or cell is discharged from 100% SOC to the cut-off voltage under the manufacturer's conditions. The battery Ah capacity on discharge is determined by several factors: cut-off voltage, discharge current, type and density of electrolyte, design of separators, battery temperature, battery age, battery usage history, number of electrodes, electrode design, and electrode dimensions. We can also quantify battery capacity in terms of Wh (or kWh) [125]. The rated capacity (Wh) is given in Equation (1)

$$Rated\ Capacity\ (Wh) = Rated\ Capacity\ (Ah) \times Battery\ Rated\ Voltage\ (V) \quad (1)$$

- Charge rate (C-rate): describes the rate at which the battery is discharged from its total capacity (for example, a 1C rate indicates that a fully charged battery will be discharged in 1 h) [126,127].
- State of Charge (SOC (%)) is expressed as the percentage of the battery's current capacity compared to its total capacity. Its equivalent in fuel-powered vehicles is the fuel gauge. As illustrated in Equation (2), SOC is commonly estimated by integrating the battery current to quantify the change in the battery capacity over time [128].

$$SOC(t) = SOC(t_0) - \int_{t_0}^{t} \frac{I_b}{3600C_n} dt \quad (2)$$

with: I_b is the battery current, C_n is the battery-rated capacity (Ah), and SOC (t_0) is the SOC initial value.

- Depth of discharge (DOD) is the percentage of capacity depleted from a fully charged battery. It is calculated by dividing the capacity discharged from a fully charged battery by the rated capacity. As seen in Equation (3), the battery depth of discharge is the complement of its SOC (i.e., as one rises, the other falls) [129,130].

$$DOD(\%) = 100 - SOC(\%) \quad (3)$$

- Internal resistance is the total equivalent resistance within the battery, referring to the ohmic contributions of its many components (collector resistance, electrolyte conductivity, etc.). This resistance depends on the battery SOC and may vary with the temperature. In addition, its value differs depending on whether the battery is being charged or discharged. It's commonly referred to as equivalent series resistance (ESR).
- State of Health (SOH) is the maximum available battery charge ratio to its rated capacity. Therefore, the state of health is an essential indicator for evaluating the battery's remaining lifespan and determining the degree of its performance decline. It can be expressed as follows [131].

$$SOH(\%) = \frac{Battery\ Available\ Capacity}{Rated\ Capacity} \quad (4)$$

- Cycle Life is the total number of charge/discharge cycles that a battery can tolerate before its capacity is considerably diminished. This feature varies with battery type and is strongly affected by discharging depth, charging method, and battery temperature. It should be noted that discharging a battery underneath its cut-off voltage can considerably reduce its lifespan [132].

All the parameters and features described in this subsection are useful for battery control and energy management system. However, two parameters are the most used in this context: SOC and SOH. Therefore, several works have been carried out to estimate these two parameters. For example, in [133], the obtained theoretical results provide essential support for battery charge control design and the development of a battery monitoring framework. In [134], the literature analysis includes almost all BMS states. The estimation approaches of SOC, SOH, state-of-power (SOP), state-of-energy (SOE), remaining useful life (RUL), state-of-function (SOF), remaining discharge time (RDT), and state-of-balance (SOB) are reviewed and discussed systematically. In [135], the authors present an approach to tracking Li-ion battery degradation and estimate SoH based on electrochemical impedance spectroscopy (EIS) measures. Distribution of relaxation times (DRT) was exploited to derive indicators correlated to the so-called degradation modes (DMs), which group the different aging mechanisms. These indicators were used to model the aging progression over the whole lifetime, enabling a physics-based SOH estimation.

5.3. Charging Strategies for EV Batteries

The cycle life, performances, and safety of a battery are all significantly influenced by strategies used to charge and discharge a battery. The most well-known battery charging/discharging strategies are described in the following [136–138]:

- Constant Voltage (CV) is a battery charging method that allows a battery to be charged by maintaining a constant voltage between its terminals. In contrast, the battery current decreases slowly to zero. Given its simplicity of implementation, this charging method is used for all battery types. However, its drawback is the high current absorbed at the beginning of the battery charging operation, which may be controlled by reducing the CV value.
- Constant Current (CC) is a charging/discharging strategy for EV batteries. It consists of maintaining the battery's current I_b constant with a fixed C-rate while the battery voltage V_b is increasing until the battery voltage reaches its maximum charge value. Then, the process is ended [43].
- Constant Current–Constant Voltage (CC-CV) is a dual-stage charging strategy for batteries. It has two phases: a CC Stage and a CV Stage, as depicted in Figure 30. During the first one, the battery is charged with a constant current I_{ref} (usually between 0.5C and 1C in the case of Li-ion battery) until the voltage battery reaches the full charge voltage V_{ref}. In the second one, the battery voltage is kept constant until the current decreases to the cut-off current (I_{co}), which is usually 0.1C or 0.05C [139].
- Multi-stage Constant-Current (MCC) is a battery fast-charging strategy consisting of several constant-current levels. The set C-rate progressively decreases at each CC stage to minimize the battery's temperature and charging time [140]. The corresponding profile is illustrated in Figure 31 [141].

The charging strategies mentioned above and others more recent were described and compared in many works [142–144].

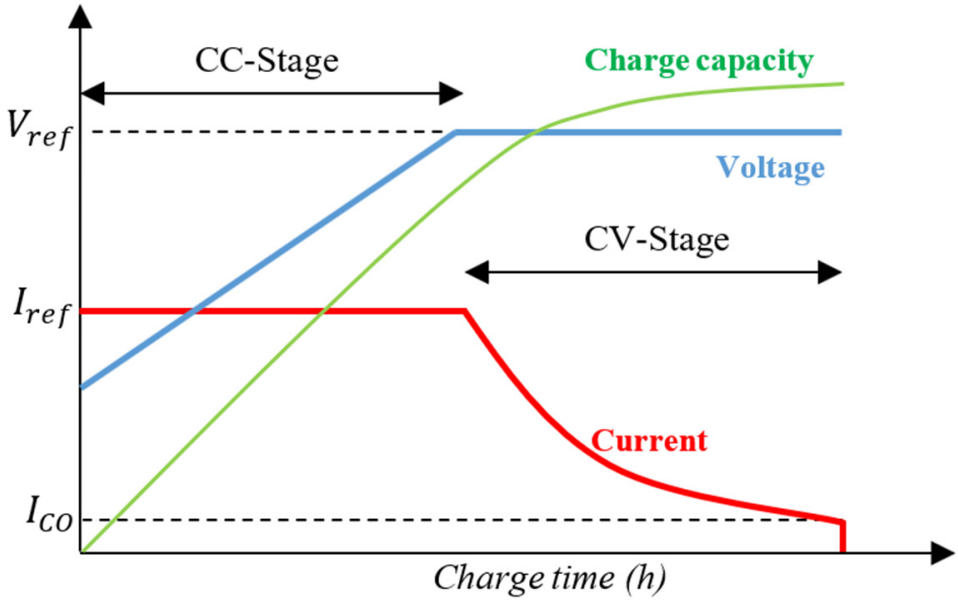

Figure 30. CC-CV battery charging strategy profile.

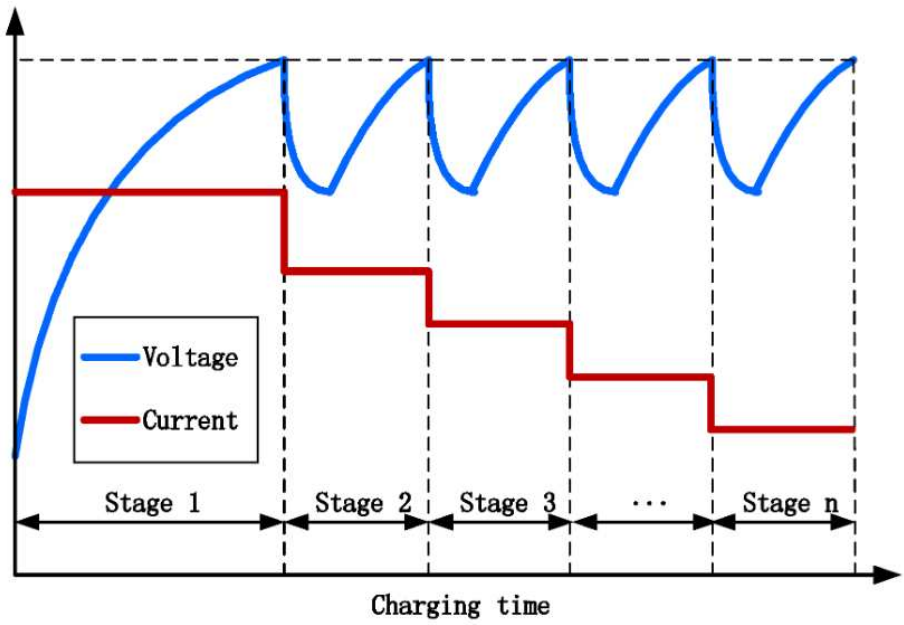

Figure 31. Profile of the Multi-stage Constant-Current battery-charging strategy.

6. Conclusions

In this work, the current EV battery charging systems were reviewed. Firstly, EV chargers were classified into several categories (on-board, off-board, inductive, conductive, dedicated, integrated, single-stage, dual-stage, unidirectional, and bidirectional), and each option was described. Next, the available topologies of the EV chargers were illustrated, and particularly, bidirectional EV chargers were highlighted. Next, the most used structures were presented, discussed, and compared. Then, an overview of the available EV charging standards in North America, Europe, Japan, China, and other regions was performed. Next, SAE charging levels and IEC charging modes were presented, and their specifications were listed. Then, EV charging couplers were shown, contrasted, and reviewed based on the charging power, charging time, availability regions, and other factors. Particularly, the SAE J1772 coupler, IEC type 2 coupler, CCS combo coupler, CHAdeMO coupler, GB/T coupler, and Tesla coupler were reviewed. Future aspects, such as the ChaoJi coupler, were

also presented. Finally, a review of the EV batteries was addressed. First, the most used battery types in the EV industry were described, and their advantages/disadvantages were listed. Next, an overview of the batteries' terminology was performed, and lastly, a brief description of the well-known battery charging methods was addressed.

In this work, we did not discuss wireless charging systems, dynamic wireless charging technology, and no more battery-swapping technology. Accordingly, we plan to write future reviews on these three topics.

Author Contributions: Conceptualization, A.R. and A.L.; methodology, A.R.; software, K.G.; validation, A.R., M.K. and Z.E.I.; formal analysis, K.R.; investigation, A.R.; resources, Z.E.I.; writing—original draft preparation, A.R.; writing—review and editing, A.R., Z.E.I. and A.L; supervision, A.R. and H.E.F.; funding acquisition, H.E.F. All authors have read and agreed to the published version of the manuscript.

Funding: This research received no external funding.

Data Availability Statement: Not applicable.

Conflicts of Interest: The authors declare no conflict of interest.

Abbreviations

AC	Alternating Current
BEV(s)	Battery Electric Vehicle(s)
CC	Constant Current
CCS	Combined Charging System
CHAdeMO	CHArge de MOve
CV	Constant Voltage
DC	Direct Current
EV(s)	Electric Vehicle(s)
EVSE(s)	Electric Vehicle Supply Equipment(s)
G2V	Grid-to-Vehicle
GB/T	Guo Biao/Tu¯ıjiàn (Recommended)
IEC	International Electrotechnical Commission
PHEV	Plug-in Hybrid Electric Vehicle
SAE	Society of Automotive Engineers
SOC	State of Charge
V2G	Vehicle-to-Grid
V2H	Vehicle-to-Home
V2X	Vehicle-to-Everything

References

1. Rietmann, N.; Hügler, B.; Lieven, T. Forecasting the Trajectory of Electric Vehicle Sales and the Consequences for Worldwide CO_2 Emissions. *J. Clean. Prod.* **2020**, *261*, 121038. [CrossRef]
2. Teixeira, A.C.R.; Sodré, J.R. Impacts of Replacement of Engine Powered Vehicles by Electric Vehicles on Energy Consumption and CO_2 Emissions. *Transp. Res. Part D Transp. Environ.* **2018**, *59*, 375–384. [CrossRef]
3. Rachid, A.; EL Fadil, H.; Belhaj, F.Z.; Gaouzi, K.; Giri, F. Lyapunov-Based Control of Single-Phase AC–DC Power Converter for BEV Charger. In *Recent Advances in Electrical and Information Technologies for Sustainable Development*; El Hani, S., Essaaidi, M., Eds.; Advances in Science, Technology & Innovation; Springer International Publishing: Cham, Switzerland, 2019; pp. 115–121. ISBN 978-3-030-05276-8.
4. *International Energy Agency Global EV Outlook 2019: Scaling-up the Transition to Electric Mobility*; OECD: Paris, France, 2019; ISBN 978-92-64-47013-2.
5. Agrawal, M.; Rajapatel, M.S. Global Perspective on Electric Vehicle 2020. *Int. J. Eng. Res. Technol.* **2020**, *9*. [CrossRef]
6. Gradinaru, G.; Marin, E.; Neagoe, I.; Rotaru, C. The Impact of Technological Evolution in the Automotive Industry on How to Manifest the Rebound Effect. In Proceedings of the 63rd International Scientific Conference on Economic and Social Development—Building Resilient Society, Zagreb, Croatia, 11–12 December 2020; pp. 179–185.
7. *International Energy Agency Global EV Outlook 2020: Entering the Decade of Electric Drive?* OCED: Paris, France, 2020; p. 276.
8. Burilovic, L.; Rados, T.; Recker, N. *Economic and Social Development: 63rd International Scientific Conference on Economic and Social Development—"Building Resilient Society": Book of Proceedings, Zagreb, Croatia, 11–12 December 2020*; Varazdin Development and Entrepreneurship Agency: Varazdin, Croatia, 2020; ISBN 978-1-74351-613-3.

9. *International Energy Agency Global EV Outlook 2021: Accelerating Ambitions despite the Pandemic*; OCED: Paris, France, 2021; p. 101.
10. Jamie Morgan Electric Vehicles: The Future We Made and the Problem of Unmaking It. *Camb. J. Econ.* **2020**, *44*, 953–977. [CrossRef]
11. Jones, L.; Lucas-Healey, K.; Sturmberg, B.; Temby, H.; Islam, M. A Comprehensive Analysis of Vehicle-to-Grid Technology Worldwide. *Realis. Electr. Veh. Grid Serv. Proj.* **2021**, 169.
12. Roland Irle Global EV Sales for 2021. Available online: https://www.ev-volumes.com/country/total-world-plug-in-vehicle-volumes/ (accessed on 25 July 2022).
13. *International Energy Agency Global EV Outlook 2022: Securing Supplies for an Electric Future*; OCED: Paris, France, 2022; p. 221.
14. European Automobile Manufacturers Association (ACEA) New Vehicles in the EU by Fuel Type: Market Share from 2018 to 2021. 2022. Available online: https://www.acea.auto/files/fuel-types-of-new-passenger-cars-in-eu-2022-1024x576.png (accessed on 22 July 2022).
15. European Automobile Manufacturers Association (ACEA) New Passenger Car Registrations by Fuel Type in the European Union 2020. Available online: https://www.acea.be/uploads/press_releases_files/20190206_PRPC_fuel_Q4_2019_FINAL.pdf (accessed on 17 May 2022).
16. European Automobile Manufacturers Association (ACEA). *Vehicles in Use, Europe 2022*; European Automobile Manufacturers' Association: Brussels, Belgium, 2022; p. 21.
17. Florian, R. Optimized Charging of Lithium-Ion Batteries with Physico-Chemical Models. Master Thesis, RWTH Aachen University, Aachen, Germany, 2021. Available online: https://d-nb.info/1248307852/34 (accessed on 27 July 2022).
18. Gür, T.M. Review of Electrical Energy Storage Technologies, Materials and Systems: Challenges and Prospects for Large-Scale Grid Storage. *Energy Environ. Sci.* **2018**, *11*, 2696–2767. [CrossRef]
19. Rachid, A.; Fadil, H.E.; Koundi, M.; Idrissi, Z.E.; Tahri, A.; Giri, F.; Guerrero, J.M. PQ Theory-Based Control of Single-Stage V2G Three-Phase BEV Charger for High-Voltage Battery. *IFAC-Pap.* **2019**, *52*, 73–78. [CrossRef]
20. Rachid, A.; Fadil, H.E.; Belhaj, F.Z.; Gaouzi, K.; Giri, F. Lyapunov-Based Control of Single-Phase AC-DC Power Converter for BEV Charger. In Proceedings of the 2017 International Conference on Electrical and Information Technologies (ICEIT), Rabat, Morocco, 15–18 November 2017; pp. 1–5.
21. Van Mierlo, J.; Berecibar, M.; El Baghdadi, M.; De Cauwer, C.; Messagie, M.; Coosemans, T.; Jacobs, V.A.; Hegazy, O. Beyond the State of the Art of Electric Vehicles: A Fact-Based Paper of the Current and Prospective Electric Vehicle Technologies. *World Electr. Veh. J.* **2021**, *12*, 20. [CrossRef]
22. Monteiro, V.; Gonçalves, H.; Ferreira, J.C.; Afonso, J.L. *Batteries Charging Systems for Electric and Plug-In Hybrid Electric Vehicles*; IntechOpen: London, UK, 2012; ISBN 978-953-51-0698-2.
23. Rachid, A.; EL Fadil, H.; Lassioui, A.; Giri, F. Advanced Control of Bidirectional Three-Phase BEV Charger with V2X Technology. *Int. J. Model. Identif. Control* **2019**, *33*, 344–357. [CrossRef]
24. Islam, S.; Iqbal, A.; Marzband, M.; Khan, I.; Al-Wahedi, A.M.A.B. State-of-the-Art Vehicle-to-Everything Mode of Operation of Electric Vehicles and Its Future Perspectives. *Renew. Sustain. Energy Rev.* **2022**, *166*, 112574. [CrossRef]
25. Monteiro, V.; Pinto, J.G.; Afonso, J.L. Operation Modes for the Electric Vehicle in Smart Grids and Smart Homes: Present and Proposed Modes. *IEEE Trans. Veh. Technol.* **2016**, *65*, 1007–1020. [CrossRef]
26. Garrido, P.; Soares, F.; Moreira, A.P. (Eds.) *CONTROLO 2016: Proceedings of the 12th Portuguese Conference on Automatic Control*; Lecture Notes in Electrical Engineering; Springer International Publishing: Cham, Switzerland, 2017; Volume 402, ISBN 978-3-319-43670-8.
27. Solanke, T.U.; Ramachandaramurthy, V.K.; Yong, J.Y.; Pasupuleti, J.; Kasinathan, P.; Rajagopalan, A. A Review of Strategic Charging–Discharging Control of Grid-Connected Electric Vehicles. *J. Energy Storage* **2020**, *28*, 101193. [CrossRef]
28. Pearre, N.S.; Ribberink, H. Review of Research on V2X Technologies, Strategies, and Operations. *Renew. Sustain. Energy Rev.* **2019**, *105*, 61–70. [CrossRef]
29. Thompson, A.W.; Perez, Y. Vehicle-to-Everything (V2X) Energy Services, Value Streams, and Regulatory Policy Implications. *Energy Policy* **2020**, *137*, 111136. [CrossRef]
30. Kisacikoglu, M.C. Vehicle-to-Grid (V2G) Reactive Power Operation Analysis of the EV/PHEV Bidirectional Battery Charger. Ph.D. Thesis, University of Tennessee, Knoxville, TN, USA, 2013.
31. Xiao, X.; Molin, H.; Kourtza, P.; Collin, A.; Harrison, G.; Djokic, S.; Meyer, J.; Müller, S.; Möller, F. Component-Based Modelling of EV Battery Chargers. In Proceedings of the 2015 IEEE Eindhoven PowerTech, Eindhoven, The Netherlands, 29 June–2 July 2015; pp. 1–6.
32. Ronanki, D.; Kelkar, A.; Williamson, S.S. Extreme Fast Charging Technology—Prospects to Enhance Sustainable Electric Transportation. *Energies* **2019**, *12*, 3721. [CrossRef]
33. Kumar, P.; Nikolovski, S.; Dong, Z.Y. (Eds.) *Internet of Energy Handbook*, 1st ed.; CRC Press: Boca Raton, FL, USA, 2021; ISBN 978-0-367-49964-8.
34. Rachid, A.; Fadil, H.E.; Rachid, K.; Lassioui, A.; Idrissi, Z.E. H-Infinity Control of Bidirectional Dc-Dc Power Converter for V2G BEV Charger. In Proceedings of the 2020 International Symposium on Advanced Electrical and Communication Technologies (ISAECT), Marrakech, Morocco, 25–27 November 2020; pp. 1–6.
35. Sousa, T.J.C.; Pedrosa, D.; Monteiro, V.; Afonso, J.L. A Review on Integrated Battery Chargers for Electric Vehicles. *Energies* **2022**, *15*, 2756. [CrossRef]

36. Lebrouhi, B.E.; Khattari, Y.; Lamrani, B.; Maaroufi, M.; Zeraouli, Y.; Kousksou, T. Key Challenges for a Large-Scale Development of Battery Electric Vehicles: A Comprehensive Review. *J. Energy Storage* **2021**, *44*, 103273. [CrossRef]
37. Rubino, L.; Capasso, C.; Veneri, O. Review on Plug-in Electric Vehicle Charging Architectures Integrated with Distributed Energy Sources for Sustainable Mobility. *Appl. Energy* **2017**, *207*, 438–464. [CrossRef]
38. Mohamed, A.A.S.; Shaier, A.A.; Metwally, H.; Selem, S.I. A Comprehensive Overview of Inductive Pad in Electric Vehicles Stationary Charging. *Appl. Energy* **2020**, *262*, 114584. [CrossRef]
39. Lassioui, A.; Fadil, H.E.; Rachid, A.; El-Idrissi, Z.; Bouanou, T.; Belhaj, F.Z.; Giri, F. Modelling and Sliding Mode Control of a Wireless Power Transfer System for BEV Charger. *Int. J. Model. Identif. Control* **2020**, *34*, 171–186. [CrossRef]
40. Amjad, M.; Farooq-i-Azam, M.; Ni, Q.; Dong, M.; Ansari, E.A. Wireless Charging Systems for Electric Vehicles. *Renew. Sustain. Energy Rev.* **2022**, *167*, 112730. [CrossRef]
41. Lassioui, A.; Fadil, H.E.; Rachid, A.; Belhaj, F.Z.; Tarkany, O.; Bajit, A. Characteristics Analysis of Wireless Power Transfer System for Electric Vehicle Charging Applications. In Proceedings of the 2018 International Symposium on Advanced Electrical and Communication Technologies (ISAECT), Rabat, Morocco, 21–23 November 2018; pp. 1–6.
42. Lassioui, A.; El Fadil, H.; Belhaj, F.Z.; Rachid, A. Battery Charger for Electric Vehicles Based ICPT and CPT—A State of the Art. In Proceedings of the 2018 Renewable Energies, Power Systems & Green Inclusive Economy (REPS-GIE), Casablanca, Morocco, 23–24 April 2018; pp. 1–6.
43. Hemavathi, S.; Shinisha, A. A Study on Trends and Developments in Electric Vehicle Charging Technologies. *J. Energy Storage* **2022**, *52*, 105013. [CrossRef]
44. Safayatullah, M.; Elrais, M.T.; Ghosh, S.; Rezaii, R.; Batarseh, I. A Comprehensive Review of Power Converter Topologies and Control Methods for Electric Vehicle Fast Charging Applications. *IEEE Access* **2022**, *10*, 40753–40793. [CrossRef]
45. Haghbin, S.; Lundmark, S.; Alakula, M.; Carlson, O. Grid-Connected Integrated Battery Chargers in Vehicle Applications: Review and New Solution. *IEEE Trans. Ind. Electron.* **2013**, *60*, 459–473. [CrossRef]
46. Mahmud, K.; Town, G.E.; Morsalin, S.; Hossain, M.J. Integration of Electric Vehicles and Management in the Internet of Energy. *Renew. Sustain. Energy Rev.* **2018**, *82*, 4179–4203. [CrossRef]
47. Yilmaz, M.; Krein, P.T. Review of Battery Charger Topologies, Charging Power Levels, and Infrastructure for Plug-In Electric and Hybrid Vehicles. *IEEE Trans. Power Electron.* **2013**, *28*, 2151–2169. [CrossRef]
48. Chakraborty, S.; Vu, H.-N.; Hasan, M.M.; Tran, D.-D.; Baghdadi, M.E.; Hegazy, O. DC-DC Converter Topologies for Electric Vehicles, Plug-in Hybrid Electric Vehicles and Fast Charging Stations: State of the Art and Future Trends. *Energies* **2019**, *12*, 1569. [CrossRef]
49. Tan, K.M.; Ramachandaramurthy, V.K.; Yong, J.Y. Latest Electric Vehicle Charging Technology for Smart Grid Application. In Proceedings of the 2018 IEEE 7th International Conference on Power and Energy (PECon), Kuala Lumpur, Malaysia, 3–4 December 2018; pp. 366–371.
50. Monteiro, V.; Afonso, J.A.; Sousa, T.J.C.; Cardoso, L.L.; Pinto, J.G.; Afonso, J.L. Vehicle Electrification: Technologies, Challenges, and a Global Perspective for Smart Grids. In *Innovation in Energy Systems*; Ustun, T.S., Ed.; IntechOpen: Rijeka, Croatia, 2019.
51. Mutarraf, M.U.; Guan, Y.; Xu, L.; Su, C.-L.; Vasquez, J.C.; Guerrero, J.M. Electric Cars, Ships, and Their Charging Infrastructure—A Comprehensive Review. *Sustain. Energy Technol. Assess.* **2022**, *52*, 102177. [CrossRef]
52. Ahmed, I.; Adil, H.M.M.; Ahmed, S.; Ahmad, I.; Rehman, Z. Robust Nonlinear Control of Battery Electric Vehicle Charger in Grid to Vehicle and Vehicle to Grid Applications. *J. Energy Storage* **2022**, *52*, 104813. [CrossRef]
53. Rachid, A.; El Fadil, H.; Giri, F.; Lassioui, A. Nonlinear Output Feedback Control of V2G Single-Phase on-Board BEV Charger. *Asian J. Control* **2020**, *22*, 1848–1859. [CrossRef]
54. Rachid, A.; Fadil, H.E.; Giri, F. Dual Stage CC-CV Charge Method for Controlling DC-DC Power Converter in BEV Charger. In Proceedings of the 2018 19th IEEE Mediterranean Electrotechnical Conference (MELECON), Marrakech, Morocco, 2–7 May 2018; pp. 74–79.
55. Veneri, O. (Ed.) *Technologies and Applications for Smart Charging of Electric and Plug-in Hybrid Vehicles*; Springer International Publishing: Cham, Switzerland, 2017; ISBN 978-3-319-43649-4.
56. Rachid, K.; EL Fadil, H.; Rachid, A.; Bouanou, T.; Gaouzi, K.; Belhaj, F.Z. Nonlinear Output Feedback Control of Bidirectional Dc-Dc Power Converter for V2X BEV Charger: Theoretical Analysis and Experimental Results. In Proceedings of the International Symposium on Advanced Electrical and Communication Technologies (ISAECT2020), Kenitra, Morocco, 25–27 November 2020; pp. 1–6.
57. Ashfaq, M.; Butt, O.; Selvaraj, J.; Rahim, N. Assessment of Electric Vehicle Charging Infrastructure and Its Impact on the Electric Grid: A Review. *Int. J. Green Energy* **2021**, *18*, 657–686. [CrossRef]
58. Sayed, K.; Gabbar, H. Electric Vehicle to Power Grid Integration Using Three-Level AC/DC Converter and PI-Fuzzy Controller. *Energies* **2016**, *9*, 532. [CrossRef]
59. Tahir, M. Electric Vehicles and Vehicle-to-Grid Technology. Master's Thesis, The Arctic University of Norway, Tromsø, Norway, 2017.
60. Grbović, P. Interface DC–DC Converters. In *Ultra-Capacitors in Power Conversion Systems*; John Wiley & Sons, Ltd.: Hoboken, NJ, USA, 2013; pp. 216–315. ISBN 978-1-118-69363-6.
61. Kissaoui, M.; Abouloifa, A.; Abouelmahjoub, Y.; Chaoui, F.Z.; Giri, F. Output-Feedback Nonlinear Adaptive Control of Single-Phase Half-Bridge Ups Systems. *Asian J. Control* **2016**, *18*, 1995–2009. [CrossRef]

62. Monteiro, V.; Catalao, J.; Sousa, T.; Pinto, J.; Mezaroba, M.; Afonso, J. Improved Voltage Control for the Electric Vehicle Operation in V2H Mode as an Off-Line UPS in the Context of Smart Homes. *EAI Endorsed Trans. Energy Web* **2020**, *7*, 160980. [CrossRef]
63. Monteiro, V.; Ferreira, J.C.; Nogueiras Meléndez, A.A.; Couto, C.; Afonso, J.L. Experimental Validation of a Novel Architecture Based on a Dual-Stage Converter for Off-Board Fast Battery Chargers of Electric Vehicles. *IEEE Trans. Veh. Technol.* **2018**, *67*, 1000–1011. [CrossRef]
64. Restrepo, M.; Morris, J.; Kazerani, M.; Cañizares, C.A. Modeling and Testing of a Bidirectional Smart Charger for Distribution System EV Integration. *IEEE Trans. Smart Grid* **2018**, *9*, 152–162. [CrossRef]
65. SAE International J1772_201710: SAE Electric Vehicle and Plug in Hybrid Electric Vehicle Conductive Charge Coupler—SAE International. Available online: https://www.sae.org/standards/content/j1772_201710/ (accessed on 26 July 2022).
66. Ahmad, A.; Khan, Z.A.; Saad Alam, M.; Khateeb, S. A Review of the Electric Vehicle Charging Techniques, Standards, Progression and Evolution of EV Technologies in Germany. *Smart Sci.* **2018**, *6*, 36–53. [CrossRef]
67. Das, H.S.; Rahman, M.M.; Li, S.; Tan, C.W. Electric Vehicles Standards, Charging Infrastructure, and Impact on Grid Integration: A Technological Review. *Renew. Sustain. Energy Rev.* **2020**, *120*, 109618. [CrossRef]
68. Osório, G.J.; Gough, M.; Lotfi, M.; Santos, S.F.; Espassandim, H.M.D.; Shafie-khah, M.; Catalão, J.P.S. Rooftop Photovoltaic Parking Lots to Support Electric Vehicles Charging: A Comprehensive Survey. *Int. J. Electr. Power Energy Syst.* **2021**, *133*, 107274. [CrossRef]
69. Zhang, T. Smart Electric Vehicle Charging: Mitigating Supply-Demand Disparity Through User Incentives—ProQuest. Ph.D. Thesis, University of California, Los Angeles, CA, USA, 2018.
70. Ayob, A.; Mohd Faizal Wan Mahmood, W.; Mohamed, A.; Zamri Che Wanik, M.; Mohd Siam, M.; Sulaiman, S.; Hanifah Azit, A.; Azrin Mohamed Ali, M. Review on Electric Vehicle, Battery Charger, Charging Station and Standards. *RJASET* **2014**, *7*, 364–373. [CrossRef]
71. SAE International J1772_201001: SAE Electric Vehicle and Plug in Hybrid Electric Vehicle Conductive Charge Coupler—SAE International. Available online: https://www.sae.org/standards/content/j1772_201001/ (accessed on 26 July 2022).
72. Paulraj, P. Charging Basics 102: Electric Vehicle Charging Levels, Modes and Types Explained | North America vs. Europe Charging Cables and Plug Types. *E-Mobility Simplified | Basics of Electric Vehicles and Charging* 2019. Available online: https://www.emobilitysimplified.com/2019/10/ev-charging-levels-modes-types-explained.html (accessed on 27 July 2022).
73. Wikipedia, The Free Encyclopedia. Wikipedia contributors SAE J1772. 2020. Available online: https://en.wikipedia.org/w/index.php?title=SAE_J1772&oldid=965111434 (accessed on 26 July 2022).
74. Yong, J.Y.; Ramachandaramurthy, V.K.; Tan, K.M.; Mithulananthan, N. A Review on the State-of-the-Art Technologies of Electric Vehicle, Its Impacts and Prospects. *Renew. Sustain. Energy Rev.* **2015**, *49*, 365–385. [CrossRef]
75. Saldaña, G.; San Martin, J.I.; Zamora, I.; Asensio, F.J.; Oñederra, O. Electric Vehicle into the Grid: Charging Methodologies Aimed at Providing Ancillary Services Considering Battery Degradation. *Energies* **2019**, *12*, 2443. [CrossRef]
76. WeberAuto. There Is No Such Thing as a Level 3 EV Charger. 2019. Available online: https://www.youtube.com/watch?v=jZBsOud4O9Q (accessed on 31 May 2022).
77. Hanauer, D. Mode 2 Charging—Testing and Certification for International Market Access. *World Electr. Veh. J.* **2018**, *9*, 26. [CrossRef]
78. International Electrotechnical Commission IEC 61851-1:2017: Electric Vehicle Conductive Charging System—Part 1: General Requirements 2017. Available online: https://webstore.iec.ch/publication/33644 (accessed on 26 July 2022).
79. Triviño, A.; González-González, J.M.; Aguado, J.A. Wireless Power Transfer Technologies Applied to Electric Vehicles: A Review. *Energies* **2021**, *14*, 1547. [CrossRef]
80. GB China National Standards. Available online: http://www.gbstandards.org/ (accessed on 28 July 2022).
81. David Herron Types of Electric Car Charging Connectors, and Compatibility: A Field Guide to Electric Vehicle Service Equipment. Available online: https://greentransportation.info/ev-charging/range-confidence/chap4-charging/4-evse-field-guide.html (accessed on 26 July 2022).
82. Hackaday. Lewin Day EV Charging Connectors Come In Many Shapes And Sizes. 2022. Available online: https://hackaday.com/2022/04/28/ev-charging-connectors-come-in-many-shapes-and-sizes/ (accessed on 28 July 2022).
83. EVSEPower EV Chargers, Cables and Connectors—EV Charger OEM 2022. Available online: https://evsepower.com/index.php/2022/03/09/ev-chargers-cables-and-connectors/ (accessed on 28 July 2022).
84. Leskarac, D.; Panchal, C.; Stegen, S.; Lu, J. PEV Charging Technologies and V2G on Distributed Systems and Utility Interfaces. In *Vehicle-to-Grid: Linking Electric Vehicles to the Smart Grid*; IET Digital Library, 2015; pp. 157–222. ISBN 978-1-84919-855-4.
85. Enel X Way The Different EV Charging Connector Types. Available online: https://evcharging.enelx.com/resources/blog/552-ev-charging-connector-types (accessed on 26 July 2022).
86. Hicks, M. English: SAE J1772 Plug (Cropped from the Original Photo). 2012. Available online: https://commons.wikimedia.org/wiki/File:SAE_J1772_7058855567.jpg (accessed on 26 July 2022).
87. Mliu92 English: Signaling Circuit for the SAE J1772 Standard. 2021. Available online: https://commons.wikimedia.org/wiki/File:J1772_signaling_circuit.svg (accessed on 26 July 2022).
88. Recharge électrique. Tom Définition: C'est quoi une prise de recharge Type 2? 2020. Available online: https://www.recharge-electrique.com/definition-prise-recharge-electrique-type-2/ (accessed on 26 July 2022).

89. Rivera, S.; Kouro, S.; Vazquez, S.; Goetz, S.M.; Lizana, R.; Romero-Cadaval, E. Electric Vehicle Charging Infrastructure: From Grid to Battery. *IEEE Ind. Electron. Mag.* **2021**, *15*, 37–51. [CrossRef]
90. Wikipedia, The Free Encyclopedia. Wikipedia contributors Type 2 Connector. 2020. Available online: https://en.wikipedia.org/w/index.php?title=Type_2_connector&oldid=943696021 (accessed on 16 July 2022).
91. Kirchhundem MENNEKES-My Power Connection: The Small Charging in between—Safe Charging with the Right Charging Cable for Mode 2. Available online: http://www.mennek.es/index.php?id=latest0&tx_ttnews[tt_news]=882&cHash=79259062694ccc973ecb1856dc6cab4c (accessed on 26 July 2022).
92. Haidar, B. A Techno-Economic Analysis of the Electric Vehicle Transition: Policy, Infrastructure, Usage, and Design. Ph.D. Thesis, Université Paris-Saclay, Paris, France, 2021.
93. National Academies of Sciences, Engineering, and Medicine. *Assessment of Technologies for Improving Light-Duty Vehicle Fuel Economy—2025–2035*; The National Academies Press: Washington, DC, USA, 2021; ISBN 978-0-309-37122-3.
94. John, D. Kelly SAE J1772 DC Level 2 Coupler CCS (Combination Charge System (CCS) Type 1 Charge Receptacle). 2019. Available online: https://weberstate.app.box.com/s/wcksjm6j80ubrqdqkqr8sy8o6vhlgr0t (accessed on 26 July 2022).
95. Ajzh2074 Español: Conector CCS Combinado Tipo 2 Según Estándar IEC 62196. Llamado También Combo2. Usado En Europa Para La Recarga de Vehículos Eléctricos Como El BWW I3, VW e-up!, VW e-Golf y GM Spark EV. 2014. Available online: https://commons.wikimedia.org/wiki/File:CCSCombo2.svg (accessed on 26 July 2022).
96. Aitor Ubierna (ITE). Samuel Sánchez (ITE) D8.2 WiseGRID FastV2G and Other Innovative Optimized Storage Solutions 2018. Available online: https://cdn.nimbu.io/s/76bdjzc/channelentries/8qd2nl6/files/D8.2_WiseGRID_FastV2G_Design.pdf?aopz8sn (accessed on 26 July 2022).
97. CHAdeMO Association CHAdeMO Website. Available online: https://www.chademo.com/ (accessed on 26 July 2022).
98. CHAdeMO Association CHAdeMO Association & Protocol 2019. Available online: https://www.chademo.com/wp2016/wp-content/uploads/2019/05/2019%20CHAdeMO_Brochure_web.pdf (accessed on 22 July 2022).
99. Pat Joint China and Japan ChaoJi EV Project Works towards "CHAdeMO 3.0. Available online: https://midaevse.com:443/news/joint-china-and-japan-chaoji-ev-project-works-towards-chademo-3-0/ (accessed on 26 July 2022).
100. Mark Kane CHAdeMO Association Introduces CHAdeMO 3.0 Protocol (ChaoJi). Available online: https://insideevs.com/news/419048/chademo-3-0-released-chaoji/ (accessed on 28 July 2022).
101. Dong, L.Y.; Yoshida, M.D. ChaoJi Standard 2020. Available online: https://www.chademo.com/wp2016/wp-content/uploads/ChaoJi202006/ChaoJi_Presenataion_EN.pdf (accessed on 18 July 2022).
102. CHAdeMO Association High Power (ChaoJi) | CHAdeMO. Available online: https://www.chademo.com/technology/high-power (accessed on 26 July 2022).
103. Standardization Administration Committee of China GB/T 20234.1-2015 | Connection Set for Conductive Charging of Electric Vehicles—Part 1: General Requirements. Available online: https://www.chinesestandard.net/PDF.aspx/GBT20234.1-2015 (accessed on 7 August 2022).
104. Standardization Administration Committee of China GB/T 20234.2-2015 | Connection Set for Conductive Charging of Electric Vehicles—Part 2: AC Charging Coupler. Available online: https://www.chinesestandard.net/Related.aspx/GBT20234.2-2015 (accessed on 26 July 2022).
105. Tang, W.W.; Wu, Y.M.; Qin, J. Comparative Study on Electric Vehicle Charging Standards at Home and Abroad. *Adv. Mater. Res.* **2013**, *608–609*, 1553–1559. [CrossRef]
106. Standardization Administration Committee of China GB/T 20234.3-2015 | Connection Set for Conductive Charging of Electric Vehicles—Part 3: DC Charging Coupler. Available online: https://www.chinesestandard.net/PDF/English.aspx/GBT20234.3-2015 (accessed on 26 July 2022).
107. Jia, L.; Qin, Y.; Liu, B.; Liu, Z.; Diao, L.; An, M. (Eds.) *Proceedings of the 4th International Conference on Electrical and Information Technologies for Rail Transportation (EITRT) 2019: Novel Traction Drive Technologies of Rail Transportation*; *Lecture Notes in Electrical Engineering*; Springer: Singapore, 2020; Volume 638, ISBN 9789811528613.
108. Kane, M. Here Is the Prototype for the New GB/T—CHAdeMO Plug and Inlet. Available online: https://insideevs.com/news/356958/prototype-new-gbt-chademo-plug-inlet/ (accessed on 26 July 2022).
109. Berman, B. CHAdeMO 3.0 to Harmonize Global EV Quick Charging Standards. Available online: https://www.sae.org/site/news/2020/05/chademo-3.0-to-harmonize-global-ev-quick-charging-standards (accessed on 29 July 2022).
110. Boyd, J. China and Japan Drive a Global EV Charging Effort: The New Standard Will Be Backward Compatible with Select Charging Stations—[News]. *IEEE Spectr.* **2019**, *56*, 12–13. [CrossRef]
111. Wikipedia, The Free Encyclopedia. Wikipedia contributors ChaoJi. 2022. Available online: https://en.wikipedia.org/w/index.php?title=ChaoJi&oldid=1070912473 (accessed on 29 July 2022).
112. Makoto Yoshida Charging Standard (Future Direction). CHAdeMO Association, February 2020. Available online: https://www.itf-oecd.org/sites/default/files/docs/charging-infrastructure-standardisation-developments-yoshida.pdf (accessed on 18 July 2022).
113. Feng, N. IMAZU Tomoya ChaoJi: A Unified Future-Oriented Charging Programme 2020. Available online: https://www.chademo.com/wp2016/wp-content/uploads/ChaoJi202006/ChaoJiTechnicalPresentation0619.pdf (accessed on 29 July 2022).
114. Yamauchi, M. The Complete Guide to Tesla Charging at Home, on the Go and Autonomously. Available online: https://www.pluglesspower.com/learn/tesla-model-s-charging-home-public-autonomously/ (accessed on 31 July 2022).

115. Wikipedia, The Free Encyclopedia. Wikipedia contributors Tesla Supercharger. 2022. Available online: https://en.wikipedia.org/w/index.php?title=Tesla_Supercharger&oldid=1100333578 (accessed on 26 July 2022).
116. Adegbohun, F.; von Jouanne, A.; Lee, K.Y. Autonomous Battery Swapping System and Methodologies of Electric Vehicles. *Energies* **2019**, *12*, 667. [CrossRef]
117. Aleksander Chudy Battery Swapping Stations for Electric Vehicles. *Inform. Autom. Pomiary W Gospod. I Ochr. Środowiska* **2021**, *11*, 36–39. [CrossRef]
118. Pistoia, G.; Liaw, B. (Eds.) *Behaviour of Lithium-Ion Batteries in Electric Vehicles*; Green Energy and Technology; Springer International Publishing: Cham, Switzerland, 2018; ISBN 978-3-319-69949-3.
119. Sayed, K. Zero-Voltage Soft-Switching DC–DC Converter-Based Charger for LV Battery in Hybrid Electric Vehicles. *IET Power Electron.* **2019**, *12*, 3389–3396. [CrossRef]
120. Ghalkhani, M.; Habibi, S. Review of the Li-Ion Battery, Thermal Management, and AI-Based Battery Management System for EV Application. *Energies* **2023**, *16*, 185. [CrossRef]
121. Mahadevan, R.; Chhabra, M.; Pasrich, P.; Barnes, F. Battery Technologies. In *Electric, Hybrid, and Fuel Cell Vehicles*; Elgowainy, A., Ed.; Encyclopedia of Sustainability Science and Technology Series; Springer: New York, NY, USA, 2021; pp. 353–393. ISBN 978-1-07-161492-1.
122. Ogura, K.; Kolhe, M.L. Battery Technologies for Electric Vehicles. In *Electric Vehicles: Prospects and Challenges*; Muneer, T., Kolhe, M.L., Doyle, A., Eds.; Elsevier: Amsterdam, The Netherlands, 2017; pp. 139–167. ISBN 978-0-12-803021-9.
123. Zhou, L.; He, L.; Zheng, Y.; Lai, X.; Ouyang, M.; Lu, L. Massive Battery Pack Data Compression and Reconstruction Using a Frequency Division Model in Battery Management Systems. *J. Energy Storage* **2020**, *28*, 101252. [CrossRef]
124. Bisschop, R.; Willstrand, O.; Amon, F.; Rosengren, M. *Fire Safety of Lithium-Ion Batteries in Road Vehicles. Technical Report 2019:50*; RISE Research Institutes of Sweden AB: BORÅS, Sweden, 2019; p. 106. [CrossRef]
125. Garcia-Valle, R.; Peças Lopes, J.A. (Eds.) *Electric Vehicle Integration into Modern Power Networks*; Springer New York: New York, NY, USA, 2013; ISBN 978-1-4614-0133-9.
126. MIT Electric Vehicle Team A Guide to Understanding Battery Specifications—From MIT Electric Vehicle Team | Nickel Institute. Available online: https://nickelinstitute.org/en/about-nickel-and-its-applications/nickel-in-batteries/a-guide-to-understanding-battery-specifications/ (accessed on 29 July 2022).
127. Prasad, G.R. Novel Technique of Fabrication of Porous Copper and Copper Oxide to Improve the Lithium-Ion Battery Performance. Master Thesis, Electronic Theses and Dissertations, South Dakota State University, Brookings, OR, USA, 2018.
128. Somakettarin, N.; Funaki, T. Study on Factors for Accurate Open Circuit Voltage Characterizations in Mn-Type Li-Ion Batteries. *Batteries* **2017**, *3*, 8. [CrossRef]
129. Yamamoto, T.; Ando, T.; Kawabe, Y.; Fukuma, T.; Enomoto, H.; Nishijima, Y.; Matsui, Y.; Kanamura, K.; Takahashi, Y. Characterization of the Depth of Discharge-Dependent Charge Transfer Resistance of a Single LiFePO4 Particle. *Anal. Chem.* **2021**, *93*, 14448–14453. [CrossRef] [PubMed]
130. Wikipedia. Depth of Discharge. 2022. Available online: https://en.wikipedia.org/wiki/Depth_of_discharge#:~{}:text=The%20depth%20of%20discharge%20is,battery%20on%20a%20regular%20basis (accessed on 20 December 2022).
131. Venugopal, P.; Vigneswaran, T. State-of-Health Estimation of Li-Ion Batteries in Electric Vehicle Using IndRNN under Variable Load Condition. *Energies* **2019**, *12*, 4338. [CrossRef]
132. Dai, Q.; Kelly, J.C. Lithium-Ion Batteries for Automotive Applications: Life Cycle Analysis. In *Electric, Hybrid, and Fuel Cell Vehicles*; Elgowainy, A., Ed.; Encyclopedia of Sustainability Science and Technology Series; Springer: New York, NY, USA, 2021; pp. 395–405. ISBN 978-1-07-161492-1.
133. Meng, J.; Boukhnifer, M.; Diallo, D. Lithium-Ion Battery Monitoring and Observability Analysis with Extended Equivalent Circuit Model. In Proceedings of the 2020 28th Mediterranean Conference on Control and Automation (MED), Saint-Raphaël, France, 15–18 September 2020; pp. 764–769.
134. Wang, Y.; Tian, J.; Sun, Z.; Wang, L.; Xu, R.; Li, M.; Chen, Z. A Comprehensive Review of Battery Modeling and State Estimation Approaches for Advanced Battery Management Systems. *Renew. Sustain. Energy Rev.* **2020**, *131*, 110015. [CrossRef]
135. Iurilli, P.; Brivio, C.; Carrillo, R.E.; Wood, V. Physics-Based SoH Estimation for Li-Ion Cells. *Batteries* **2022**, *8*, 204. [CrossRef]
136. Jiang, L.; Cao, Y.; Li, Y.; Zhao, Y.; Liu, P.; Huang, C.; Xu, Y.; Wang, H.; Sun, Y. Optimal Charging Strategy with Complementary Pulse Current Control of Lithium-Ion Battery for Electric Vehicles. *IEEE Trans. Transp. Electrif.* **2022**, *8*, 62–71. [CrossRef]
137. Duru, K.K.; Karra, C.; Venkatachalam, P.; Betha, S.A.; Anish Madhavan, A.; Kalluri, S. Critical Insights into Fast Charging Techniques for Lithium-Ion Batteries in Electric Vehicles. *IEEE Trans. Device Mater. Reliab.* **2021**, *21*, 137–152. [CrossRef]
138. Balog, R.S.; Davoudi, A. Batteries, Battery Management, and Battery Charging Technology. In *Electric, Hybrid, and Fuel Cell Vehicles*; Elgowainy, A., Ed.; Encyclopedia of Sustainability Science and Technology Series; Springer: New York, NY, USA, 2021; pp. 315–352. ISBN 978-1-07-161492-1.
139. Dung, L.R.; Chen, C.E.; Yuan, H.F. A Robust, Intelligent CC-CV Fast Charger for Aging Lithium Batteries. In Proceedings of the 25th IEEE International Symposium on Industrial Electronics (ISIE), Santa Clara, CA, USA, 8–10 June 2016; pp. 268–273.
140. Cho, I.-H.; Lee, P.-Y.; Kim, J.-H. Analysis of the Effect of the Variable Charging Current Control Method on Cycle Life of Li-Ion Batteries. *Energies* **2019**, *12*, 3023. [CrossRef]
141. Min, H.; Sun, W.; Li, X.; Guo, D.; Yu, Y.; Zhu, T.; Zhao, Z. Research on the Optimal Charging Strategy for Li-Ion Batteries Based on Multi-Objective Optimization. *Energies* **2017**, *10*, 709. [CrossRef]

142. Meng, J.; Yue, M.; Diallo, D. Nonlinear Extension of Battery Constrained Predictive Charging Control with Transmission of Jacobian Matrix. *Int. J. Electr. Power Energy Syst.* **2023**, *146*, 108762. [CrossRef]
143. Khalid, H.A.; Al-Emadi, N.A.; Ben-Brahim, L.; Gastli, A.; Cecati, C. A Novel Model Predictive Control with an Integrated SOC and Floating DC-Link Voltage Balancing for 3-Phase 7-Level PUC Converter-Based MV BESS. *Int. J. Electr. Power Energy Syst.* **2021**, *130*, 106895. [CrossRef]
144. Mathieu, R.; Briat, O.; Gyan, P.; Vinassa, J.-M. Fast Charging for Electric Vehicles Applications: Numerical Optimization of a Multi-Stage Charging Protocol for Lithium-Ion Battery and Impact on Cycle Life. *J. Energy Storage* **2021**, *40*, 102756. [CrossRef]

Disclaimer/Publisher's Note: The statements, opinions and data contained in all publications are solely those of the individual author(s) and contributor(s) and not of MDPI and/or the editor(s). MDPI and/or the editor(s) disclaim responsibility for any injury to people or property resulting from any ideas, methods, instructions or products referred to in the content.