zoonotic diseases

MDPI

Review

Rat Hepatitis E Virus (*Rocahepevirus ratti*): Global Evidence, Knowledge Gaps, and Zoonotic Risks

Dennis Kabantiyok [1,2,*], Asinamai Athliamai Bitrus [2], Olajide Adewale Owolodun [1], David Oludare Omoniwa [3], Oyelola Adegboye [4], Noemi Schäfer [5], Daniel Sauter [5], Siddharth Sridhar [6,7,8] and Clement Adebajo Meseko [1,2]

1 Diagnostic Services Division, National Veterinary Research Institute (NVRI), Vom 930010, Nigeria; olajide.owolodun@nvri.gov.ng (O.A.O.); clement.meseko@nvri.gov.ng (C.A.M.)
2 Department of Veterinary Microbiology, Faculty of Veterinary Medicine, University of Jos, Jos 930001, Nigeria; bitrusaa@unijos.edu.ng
3 Department of Veterinary Medicine, Faculty of Veterinary Medicine, University of Jos, Jos 930001, Nigeria; omoniwad@unijos.edu.ng
4 Menzies School of Health Research, Charles Darwin University, Darwin, NT 0811, Australia
5 Institute for Medical Virology and Epidemiology of Viral Diseases, University Hospital Tubingen, 72076 Tübingen, Germany
6 State Key Laboratory of Emerging Infectious Diseases, Carol Yu Centre for Infection, Department of Microbiology, School of Clinical Medicine, Li Ka Shing Faculty of Medicine, The University of Hong Kong, Pokfulam, Hong Kong 999077, China; sid8998@hku.hk
7 Centre for Virology, Vaccinology and Therapeutics, Hong Kong Science and Technology Park, Units 208-213, 2/F, Building 15W, Hong Kong 999077, China
8 Pandemic Research Alliance, The University of Hong Kong, Hong Kong 999077, China
* Correspondence: denniskabantiyok@nvri.gov.ng

Simple Summary

The discovery of rat hepatitis E virus (rHEV; *Rocahepevirus ratti*) in Brown rats (*Rattus norvegicus*) in 2010 and its proven zoonotic potential have raised global public health concerns. The widespread distribution of the rodent reservoir and an expanding host range increase the complexity of its transmission dynamics. While the number of diagnosed human cases is increasing, significant research gaps persist. Key questions include the proportion of hepatitis cases attributable to rHEV, its prevalence within vulnerable populations, and the social and environmental factors influencing its spread. Additionally, understanding the prevalence among different rodent species, the dominant viral clades, and the impact of pig populations on transmission risk are major research gaps. Addressing these gaps through enhanced surveillance is essential for developing targeted interventions and improving our understanding of rHEV epidemiology, where the disease is endemic and reservoir hosts are present.

Check for updates

Academic Editor: Stephen K. Wikel

Received: 29 April 2026
Revised: 18 June 2026
Accepted: 1 July 2026
Published: 8 July 2026

Copyright: © 2026 by the authors. Licensee MDPI, Basel, Switzerland. This article is an open access article distributed under the terms and conditions of the Creative Commons Attribution (CC BY) license.

Abstract

Rat hepatitis E virus (rHEV) is an emerging zoonotic pathogen, increasingly detected in human, animal, and environmental samples globally. Although rHEV shares the same subfamily as human hepatitis E virus (HEV; *Paslahepevirus balayani*), which is endemic across Africa, little is known about rHEV ecology on the continent beyond an isolated travel-related case linked to the Democratic Republic of Congo and Gabon. As a rodent-borne virus, rHEV poses a public health risk due to the widespread presence of the synanthropic reservoir *Rattus norvegicus*. Limited data on hepatitis of unknown origin further emphasise the need for active surveillance to understand the distribution, epidemiology, and impact of rHEV on human health. This review summarises our current knowledge on the global distribution of rHEV in humans, animals, and the environment, highlighting the importance of ongoing surveillance through the One Health Approach. Monitoring the virus in

countries such as Nigeria, a country with a significant pig population and documented circulation of hepatitis E virus (HEV), could improve healthcare for immunocompromised and at-risk populations. Furthermore, the viral evolution may facilitate host adaptation and transmission, thereby complicating control efforts. These factors underscore the necessity for targeted research and intervention strategies to address the emerging threat of rHEV effectively.

Keywords: Rat hepatitis E virus (rHEV); *Rocahepevirus ratti*; Nigeria; Hepatitis E Virus (HEV); zoonotic spillover; One Health

1. Introduction

Hepatitis E caused by *Paslahepevirus balayani* (bHEV) presents a significant global health burden, with 19.47 million human infections worldwide and an estimated 3.3 million symptomatic cases, leading to 70,000 deaths and 3000 stillbirths annually [1]. HEV is a single-stranded, quasi-enveloped positive-sense RNA virus in the subfamily *Orthohepevirinae* of the family *Hepeviridae*. It has a global distribution and is the leading cause of large-scale outbreaks of acute hepatitis [2]. The virus was first identified as an 'epidemic non-A non-B' entity by Khuroo in the Kashmir valley [3] before the Russian scientist Balayan detected and established its viral status by infecting himself with faecal extracts from infected persons in 1983 [4,5].

The term 'epidemic non-A non-B hepatitis' was historically linked to large-scale waterborne virus outbreaks in India. These epidemics typically followed severe flooding that caused the release of human sewage contaminated with a viral agent that was serologically negative for both hepatitis A and B viruses [6]. Subsequent epidemiological studies investigating the widespread waterborne epidemic of hepatitis of unknown origin in the Kashmir Valley, which involved 274 individuals, were suggestive that the pathogen was a novel member of the hepatitis viruses [7]. In 1983, HEV was first described as a distinct viral particle in the faeces of an infected volunteer and a cynomolgus monkey inoculated with extracts of the virus from an infected human patient. This finding was later confirmed in an Indian patient presenting with enteric non-A, non-B hepatitis [4,8]. Following the identification of HEV, retrospective sero-epidemiological screening of historical outbreaks revealed that sixteen out of seventeen previous outbreaks showed the involvement of HEV, overturning the prior assumption that hepatitis A virus (HAV) was the sole agent [4].

Due to its sero-epidemiological characteristics and enteric route of transmission, HEV was initially assumed to be a purely human pathogen closely related to HAV. However, HEV was later recognised as an infectious agent exhibiting distinct transmission patterns, alongside highly diverse host and geographical distributions. Initial taxonomic classification categorised the family into two primary genera: *Paslahepevirus* (including *P. alci*, *P. crocidurae* and *P. balayani* subtypes HEV-1 to HEV-8) and *Rocahepevirus* (including *R. ratti* and *R. eothenomi*). The human-restricted genotypes (HEV-1 and HEV-2) of *Paslahepevirus balayani* (bHEV) are predominantly associated with large-scale waterborne outbreaks in low-income regions of Southeast and Central Asia, as well as North and Western Africa. Conversely, the zoonotic genotypes (HEV-3 and HEV-4) are endemic throughout Europe, North America, and Southeast Asia [8,9]. Additionally, HEV-5 and HEV-6 have been isolated from wild boars in Japan, and HEV-7 and HEV-8 were recently reported in dromedary and Bactrian camels, respectively. Notably, HEV-7 possesses documented zoonotic potential, linked to the consumption of unpasteurised camel's milk. On the other hand, *Rocahepevirus* subtype C1 (rHEV) is associated with rodents and shrews [10,11], C2 is restricted to minks and

ferrets [12], while C3–C5 have been recovered from the environment and wildlife, including voles (*R. eothenomi*) [13,14]. Because the full diversity of hepatitis E viruses remains incompletely characterised, additional genotypes are likely to be discovered [15]. This expanding host range of HEV is further evidenced by documented seroconversion in domestic pets, such as dogs and cats, in the absence of any known corresponding HEV strains, strongly suggesting the circulation of as-yet-unrecognised genotypes [15,16].

A key pathogen closely linked to bHEV is *Rocahepevirus ratti* (i.e., HEV-C1). Previously called *Orthohepevirus* species *C*, *Rocahepevirus ratti* subtype C1 is an emerging zoonotic agent often referred to as 'rat hepatitis E virus' (rHEV). Although it was first isolated from *Rattus norvegicus* in Germany in 2010 [17], it has since been identified as the causative agent of infection in several immunocompromised patients across Asia and Europe. Due to its significant phylogenetic divergence from bHEV (sharing only 55–60% nucleotide identity) [18], and its historical inability to infect rhesus monkeys under experimental conditions [19], rHEV was initially considered incapable of infecting humans. However, this paradigm shifted in 2018, when an immunocompromised liver transplant recipient in Hong Kong was diagnosed with an acute rHEV infection, establishing the human index case [18]. Following the first case in Hong Kong, a wide-scale clinical surveillance programme identified an additional 21 positive human cases of rHEV infection in the same city [18,20–22].

Since establishing its zoonotic status in rodents from Hong Kong, rHEV has been recovered from rodent populations globally, including in Romania [23], Finland [24], Hungary [25], and Kenya [10], where it was also isolated from a shrew. Current epidemiological studies suggest that human spillover events are frequently preceded by epizootics in rodents [26,27]. Furthermore, rHEV RNA has been detected in the environment, particularly from wastewater and surface water across Europe and South America [28]. Similarly, active surveillance of community wastewater and irrigation water in Cameroon reveals the presence of HEV-C1-like viral particles [29] (Figure 1).

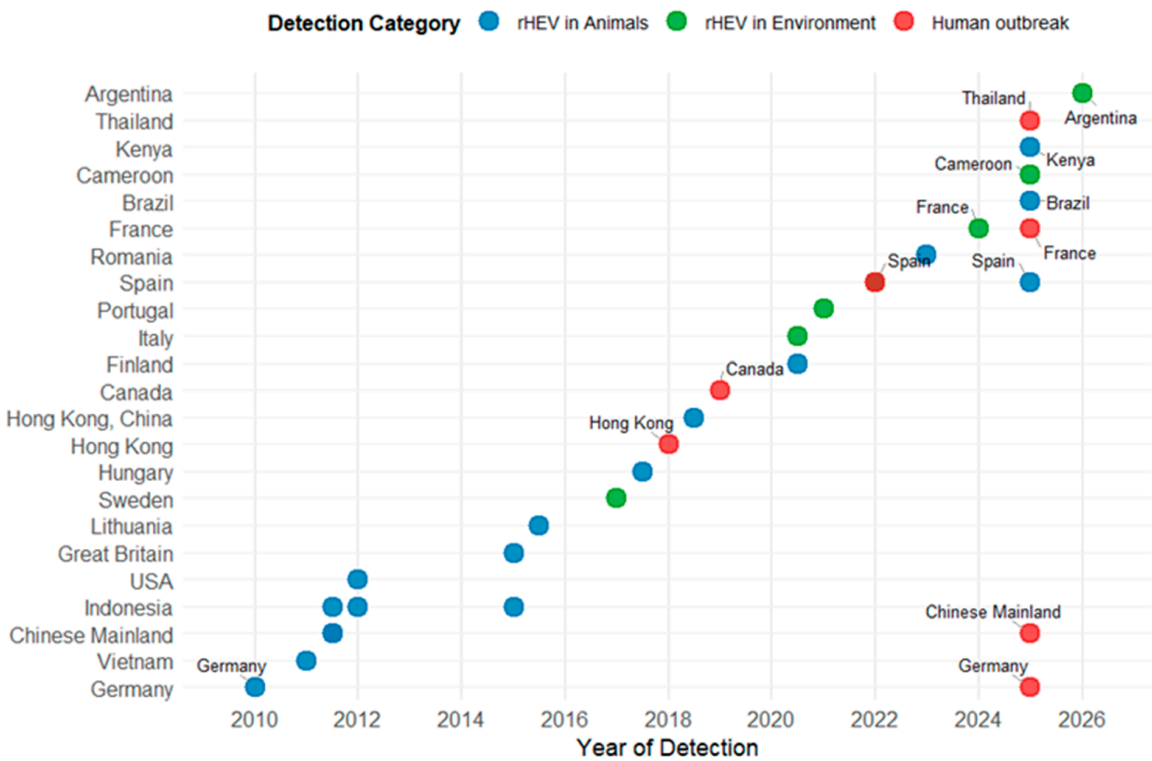

Figure 1. Timeline of rHEV detection in humans, animals, and the environment across different countries.

As an emerging pathogen with documented cases across different continents, rHEV poses a distinct threat to health security, exacerbated by globalisation and its inherent zoonotic potential. Although rodents are often classified as wildlife, their cosmopolitan distribution and close coexistence with humans, even in extreme environments, facilitate viral transmission and cross-species spillover. Situ et al. [21] observed that communities may experience peak seasons when the virus is actively circulating in a population, most likely associated with heightened human exposure risks. While currently speculative, elucidating the seasonality and drivers of these spillover events is essential for guiding public health interventions. Epidemiological studies show extensive circulation of bHEV in both humans and animals across Nigeria [30]. This includes extensive circulation of the virus in swine across several Nigerian states, supporting the premise that pigs are the main reservoir of HEV. Furthermore, Clement et al. [31] reported a viral co-circulation among pigs and workers of an intensive farm in Lagos.

Despite its clinical relevance, rHEV is excluded from routine diagnostic screening in healthcare settings. This gap is particularly pronounced in low-resource settings where constrained healthcare resources are disproportionately allocated toward highly endemic diseases. Consequently, hepatitis B virus (HBV) and hepatitis C virus (HCV) remain the primary targets of clinical screening when viral hepatitis is suspected, and this is arguably because of the widespread availability and affordability of rapid diagnostic kits for these pathogens. The ongoing shortage of adequate diagnostic assays for human patients, combined with the lack of coordinated, large-scale surveillance frameworks across wildlife and the environment, represents critical gaps. Therefore, the true circulation dynamics, geographical burden, and incidence of human rHEV infections remain largely unknown [11]. To address these open questions, this narrative review focuses on global evidence documenting rHEV at the human–animal–environment interface. By highlighting critical knowledge gaps within Nigeria and across Africa, this work emphasises the One Health significance of the virus and identifies strategic priorities for future research on its ecology, drivers, and transmission dynamics.

2. Method

From December 2025 to April 2026, we evaluated 102 articles from electronic databases such as PubMed, Google Scholar, and Semantic Scholar. To ensure a comprehensive overview, grey literature sources were also included. Searches were conducted using keywords such as "Hepatitis E Virus," "*Rocahepevirus ratti*", "Rat hepatitis E virus", and "HEV-C1". Eligible publications, which include original research, reviews, and relevant web-based information, were restricted to those published in the English language.

3. Taxonomy and Structure of rHEV

The *Hepeviridae* family is divided into two subfamilies: *Orthohepevirinae* and *Parahepevirinae*. Within the *Orthohepevirinae* subfamily, there are four genera (*Avihepevirus*, *Chirohepevirus*, *Paslahepevirus*, and *Rocahepevirus*) comprising ten distinct species [32,33]. Two species within this subfamily, *Paslahepevirus balayani* (bHEV) and *Rocahepevirus ratti* (rHEV), are of broad scientific and medical interest due to their ability to cross species barriers and infect humans and various animal hosts [32,34].

Hepatitis E viruses have a positive-sense, single-stranded RNA genome of approximately 7.2 kb, with a diameter ranging between 27 and 34 nm [17,32]. The genome features a 5′ 7-methylguanylate (7 mG) cap and a poly-A tail at the 3′ end, with short stretches of untranslated regions (UTRs). It encodes three major open reading frames (ORFs 1–3) (Figure 1) that are shared across all HEV variants [35]. ORF1 encodes non-structural proteins involved in viral transcription and replication [36]; ORF2 encodes the structural capsid

protein responsible for virion assembly and attachment to host cells [37]; and ORF3 encodes a multifunctional phosphoprotein required for viral morphogenesis and release [38]. An additional ORF4, overlapping with ORF1, was recently discovered. This reading frame is functionally nonessential and is exclusive to bHEV genotype 1 [16,39].

Structurally, the HEV capsid protein folds into three major structural domains: the shell (S), middle (M), and protruding (P) domains [17] (Figure 2). The highly conserved S domain forms a basal scaffold that supports the M and P domains, while the M and P domains constitute the outer surface, which serves as the primary target for neutralising antibodies and elicits the strongest immune response [40]. Within the *Rocahepevirus ratti* species, there are three viral subtypes, namely, C1 (from *Rattus* spp.), C2 (isolated from *Mustela putorius*), and C3 (from *Apodemus* spp.) [41].

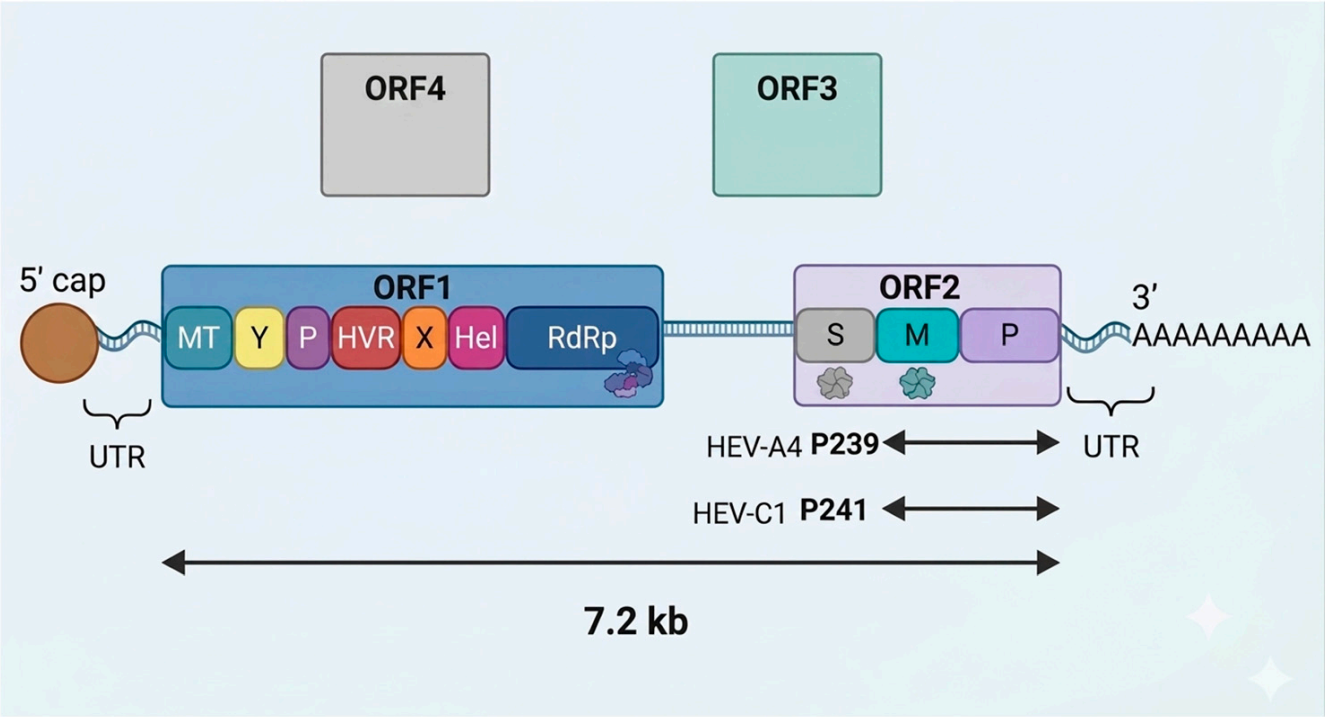

Figure 2. HEV genome showing the major ORFs and their domains. The non-structural proteins of ORF1 (Methyltransferase (MT), Y domain, Papain-like domain (P), Hypervariable region (HVR), X domain, and Helicase domain (Hel)), and the three domains of the capsid protein (The S Shell, Middle M, and the Protruding P domains) of ORF2 are highlighted in blue and violet, respectively. ORF3 and ORF4 are shown in green and grey, respectively. The 5′ and 3′ ends include short untranslated regions (UTR), while a poly A tail is located at the 3′ end.

Phylogenetic analyses of rHEV revealed two distinct evolutionary clades: clade I (encompassing subtypes a, d, e) and clade II (encompassing subtypes b, c, and f). Clades II and Id comprise all documented isolates originating from Asia, with clade IIb encompassing the 22 cases reported in Hong Kong. In contrast, all other clade II isolates (c and f) and the entirety of clade I (a, d, and e) exhibit a broader geographical distribution [20]. With an average mutation rate of 1.06×10^{-2} substitutions per site per year (subs/site/year), rHEV reveals a high evolutionary rate that is within the upper rank of typical RNA viruses' rates of (10^{-5} to 10^{-1} subs/site/year). Notably, this rate is also approximately six times higher than the substitution rate for bHEV (1.76×10^{-3} subs/site/year), indicating a notably high mutation frequency [42]. A study by Benavent et al. [41] supports this perspective, illustrating that the molecular evolution of rHEV reveals a pathogen dynamically adapting to expand its host range beyond its primary reservoir, the brown rat (*Rattus norvegicus*).

A foundational driver of this adaptive evolutionary capacity is its genetic divergence; rHEV exhibits approximately 44% nucleotide sequence divergence from the closely related bHEV genotype, establishing it as a highly distinct lineage within the *Hepeviridae* family [41]. This divergence is biologically reflected in the expanding range of different animal species from which the rHEV RNA has been recovered. However, the exact molecular mechanism limiting efficient human-to-human transmission remains poorly understood. More genomic sequence analysis would be required to pinpoint the precise substitutions guiding these host range adaptations.

4. The Clinical Course of rHEV

The clinical presentation of human rHEV infection is gradually being clarified as more human cases are reported globally. The precise incubation period of the virus is poorly defined, unlike that of bHEV, which ranges between 2 and 10 weeks [1]. Surveillance data from Situ et al. [21] further showed that rHEV accounts for about 50% of confirmed chronic hepatitis cases in Hong Kong, China. Early reports of rHEV in humans have linked infection to elevated alanine aminotransferase (ALT) levels and a severe clinical course, especially within immunocompromised patients, who face disproportionate risk of developing chronic liver disease. Consequently, studies across Spain, Germany, and France have corroborated these adverse clinical outcomes among solid organ transplant recipients, people living with HIV, and haematological malignancy patients [43–45].

In most cases, rHEV clinical presentations mirror those induced by zoonotic bHEV genotypes 3 and 4, presenting initially as a self-limiting acute icteric liver hepatitis, which sometimes progresses to severe chronic hepatitis in immunocompromised individuals. Beyond classical hepatic complications, confirmed rHEV infections in immunosuppressed patients have been linked to cases of extrahepatic manifestations, including glomerulonephritis and encephalitis [22,46]. Unlike HEV genotypes 2, 3, and 4, which have been associated with stillbirth and pregnancy complications leading to abortion [2,47], the impact of rHEV in pregnancy remains poorly understood. However, a recent study indicates that the virus is incapable of efficiently replicating in human placental cells [48], establishing further that rHEV may not induce adverse outcomes during pregnancy [26].

Importantly, rHEV disease is not restricted to the immunocompromised. A study described a travel-related event involving an immunocompetent patient who contracted the virus and displayed classical signs of acute viral hepatitis. This confirmed that immunocompetent individuals are also capable of being infected and becoming symptomatic [19]. This paradigm further reinforced the findings of similar events in Spain, detailing acute, symptomatic rHEV infection in two additional immunocompetent individuals who presented with acute rHEV infection [49].

5. Diagnostic Approaches for Rat Hepatitis E Virus

Rat HEV viral RNA has been successfully detected in blood, faeces, saliva, rectal swabs, and liver samples. Since its first discovery in 2010 [50], various research groups have established molecular and serological methodologies for testing. Nonetheless, global diagnostic surveillance remains severely hampered by a lack of commercially validated assays and universally recognised reference consensus protocols [51]. Consequently, diagnostic and research laboratories are forced to rely on in-house standardised tests.

Standard molecular diagnostics rely on nested reverse transcription PCR (RT-PCR) and quantitative real-time RT-PCR (RT-qPCR). These assays target the viral RNA-dependent RNA polymerase (RdRp) domain, which represents a highly conserved structural region within the ORF1 across all *Hepeviridae*. Despite the conserved nature of the RdRp domain, different researchers utilise divergent in-house primer sets that target distinct positions

within the ORF1, selected based on the strains of interest or specific objectives [18,28]. This lack of primer consensus poses a major diagnostic challenge; mismatches at primer-binding sites can significantly alter the analytical sensitivity and specificity of the assays, potentially leading to underreported viral loads or false-negative results in highly divergent lineages.

Serological detection of rHEV relies on in-house sandwich enzyme immunoassays (EIAs), dot blot assays (DBAs), and the differentiated antibody response (DARE) induction method. These platforms target the highly immunoreactive capsid E2 protein (P241aa), encoded in the ORF2 region, which serves as the primary structural immunogen strongly eliciting an antibody response. The DARE method is notable for simultaneously screening and differentiating between rHEV and bHEV in a single step, without running parallel assays [26].

Differentiating between rHEV and bHEV is important because they share approximately 48% sequence identity [41]. This important genetic divergence introduces a high chance of false negatives if human HEV assays are used for rHEV. Furthermore, anti-bHEV antibodies are incapable of providing neutralising cross-protection against rHEV. For this reason, serological tests without corresponding PCR and sequence data are to be interpreted with caution. Current serological techniques focus only on IgG detection, without detection of IgM, because detecting the RNA and sequence information is essential, especially for an emerging pathogen. Finally, just like with molecular detection, there are no generally accepted cut-offs for in-house ELISA. Each laboratory standardises its protocols independently, a challenge that is expected to persist, as the genetic diversity of rHEV is still unclear, and more novel variants may be discovered in the future [16,18].

6. Control and Management of Rat Hepatitis E Virus

Effective control strategies for rHEV rely heavily on our understanding of the reservoir host, the virus's persistence in the environment, and the exact routes of transmission. At present, the role of rodents in the transmission cycle has not been clearly described. While several patients in Hong Kong diagnosed with the virus reported seeing rodents around their residences and workplaces, the precise transmission route from rodents to humans remains largely inferential [22]. There are increasingly documented cases of its contamination of municipal wastewater and recreational surface waters (Cameroon, Spain, and Argentina) [29,52,53]. However, there is yet no data describing its persistence on surfaces and fomites, which are probable vectors for indirect transmission. Consequently, control efforts must leverage current knowledge and adopt infection prevention and control (IPC) frameworks established for its closest relative, bHEV. Control strategies can be achieved in two ways: by controlling human–reservoir interactions and clinical management of the disease in infected patients.

A major approach to the control of rHEV lies in the classical pest control management, which focuses on depopulating rodents. Although intensive eradication raises concerns about disrupting ecological balance, commensal rodents are highly proliferative and resilient in difficult terrains. The control of pest-attributable diseases has benefited from this approach in the past. This, however, depends on context-specific scenarios, as the likelihood of direct contact with rodents is significantly lower in urban centres than among populations residing in peri-urban informal settlements or forested interfaces. Therefore, public health campaigns must prioritise improving personal hygiene and safeguarding food items from rodent contamination to break the chain of transmission.

As an emerging disease that complicates other underlying health conditions, a common management of rHEV frequently relies on clinically treating the condition by administering the antiviral guanosine analogue ribavirin [54]. The use of ribavirin for rHEV treatment is not without complications, as there is evidence of haemolytic anaemia and organ

failure, leading to discontinuation of treatment. In vitro studies on the antiviral effect of molnupiravir, a nucleoside analogue, and ribavirin in human hepatoma cell lines (PLC/PRF/5) and primary rat hepatocytes (PRHs) have shown promising outcomes with minimal cytotoxicity. However, these drugs produced superior outcomes when combined [55].

7. One Health Approach Surveillance Frameworks

To effectively control the emergence and spread of rHEV, it is crucial to embrace the One Health approach (OHA) as a primary mechanism for improving global health at both local and regional levels. The OHA promotes multisectoral collaboration through transdisciplinary frameworks at local, national, regional, and global scales to achieve optimal health outcomes by recognising the interconnectedness of humans, animals, plants, and their shared environment [56,57]. Although major infectious disease outbreaks, such as SARS in 2003, swine flu (H1N1) in 2009, and MERS in 2012, highlighted the necessity of the OHA, it was the SARS-CoV-2 pandemic in 2019 that catalysed the operationalisation of specific OHA facets across various organisational levels [58]. Despite these advancements, the OHA still suffers from poor implementation at the local levels. Within nations that have formally adopted the OHA, various aspects of the framework remain largely theoretical and are not systematically executed.

Identifying the viral agent (rHEV), its primary reservoirs (rodents), and its environmental presence (wastewater) constitutes a critical element of OHA surveillance frameworks. This epidemiological data is essential for operationalizing the core technical domains of the OHA framework, which include communication, prevention and control, joint outbreak response, and governance policy [57]. A targeted One Health surveillance framework for rHEV should focus primarily on screening for the agent in wastewater, rodent populations, and humans. This includes identifying vulnerable human cohorts beyond the immunocompromised, specifically targeting individuals whose occupations, social circumstances, or lifestyles predispose them to viral exposure. Forest guards or wildlife workers, farm owners with rodent infestation, and those who use needles to inject drugs stand to benefit from such interventions. Furthermore, continuous active surveillance in animals is necessary to define the range of susceptible hosts within the Nigerian context, thereby guiding targeted public health communication and infection prevention and control (IPC) strategies.

8. Global Evidence: A Geographical Map of rHEV

8.1. rHEV in Humans

The confirmed zoonotic status of rHEV and the increasingly diverse geographical distribution of human cases raise questions about the true extent of its global spread. To date, rHEV has been detected in humans, animals, and the environment (Figure 3), establishing its One Health status. Understanding its prevalence and the implications of its genetic diversity for zoonotic risk assessment is essential for evaluating emergent public health threats [59]. Globally, approximately 50 human cases of rHEV have been reported [59], with most of these cases detected in Asia. The frequency of rHEV cases in clinical samples and sympatric rodent and other small-mammal reservoirs in Asia makes this region an area of interest on the epidemiological map of the virus.

The majority of human cases represent locally acquired infections, except for two travel-related events: a Canadian patient who developed symptoms after a recent trip to Gabon and DRC [19], as well as a French patient who developed symptoms after visiting India [20]. The African scenario represents an emerging landscape characterised by diagnostic blind spots because common hepatitis screening focuses on HBV and HCV. The Canadian case not only suggests that the virus may be actively circulating in sub-Saharan Africa, but also highlights a high possibility of a distinct clade, underscoring the need for active surveillance

in human and animal interfaces [41]. This is supported by phylogenetic evidence indicating that sequences of the Canadian patient clusters are independent from previously identified rHEV, implying that they belong to a different genotype or a completely new subtype [19]. While it is expected that travel-related cases of emerging diseases could spark public health concerns due to risks of large-scale transmission, this is not the case with rHEV. This containment is likely because it is not yet adapted for effective human-to-human transmission, unlike observed with other infectious pathogens such as the Ebola virus and mpox virus.

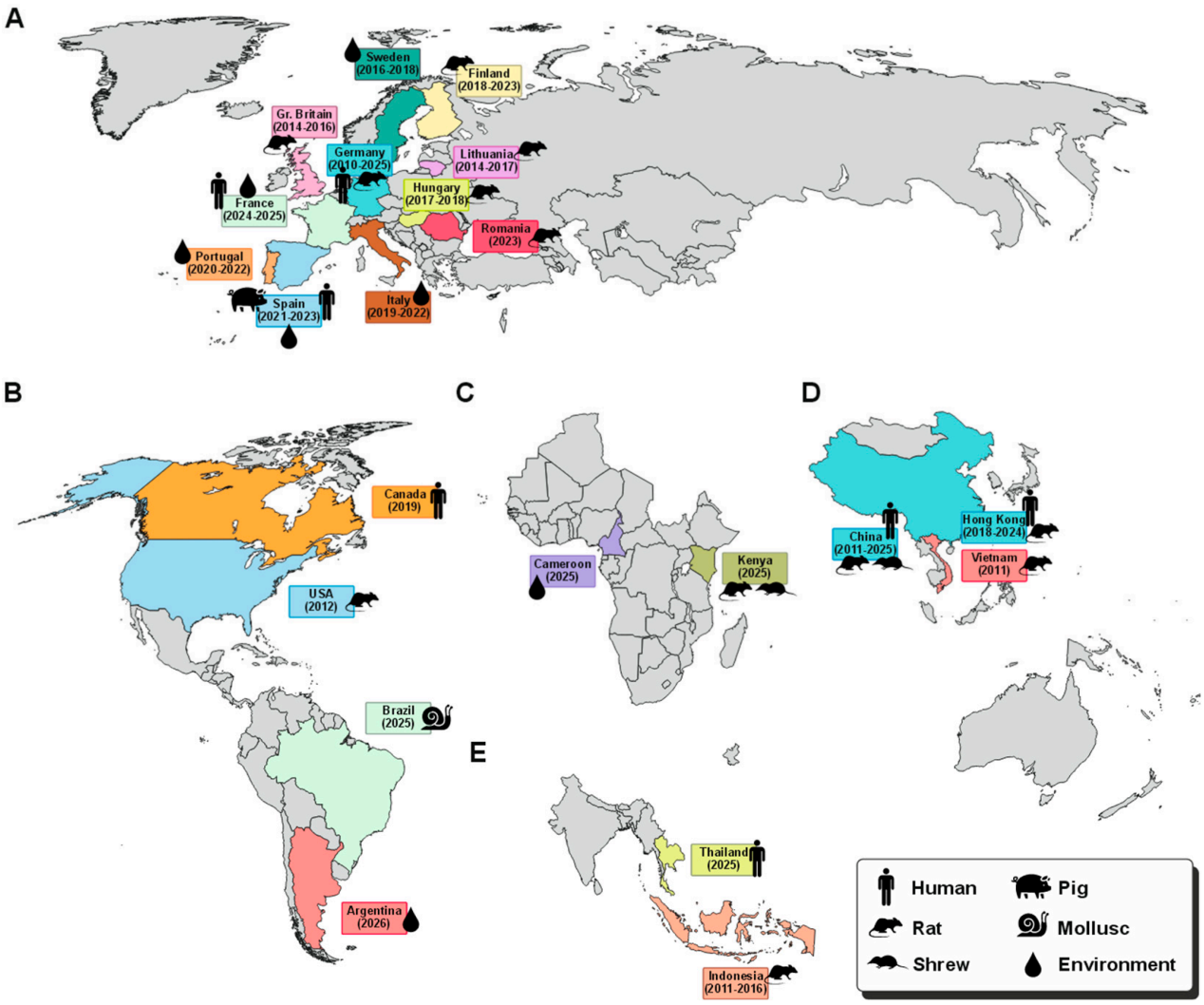

Figure 3. Global distribution and ecological contexts of rHEV detections across major WHO regions. (**A**) European Region (EUR). Multiple detections of rHEV have been reported across Europe between 2010 and 2025, including detections in rodents, environmental samples, pigs, and humans. (**B**) Region of the Americas (AMR). Evidence of rHEV circulation includes detection in rodents in the United States (2012), human infection reported in Canada (2019), environmental detection in Brazil (2025), and environmental surveillance findings in Argentina (2026). (**C**) African Region (AFR): rHEV-related viruses were detected in rodents and shrews in Kenya (2025), representing one of the few reports from the African continent. (**D**) Western Pacific Region (WPR). Early detections of rHEV in rodents and shrews were reported in China between 2011 and 2012, with subsequent human infections identified in Hong Kong during 2018–2024. (**E**) South-East Asia Region (SEAR): rHEV was detected in rodents in Indonesia between 2011 and 2016.cons indicate the detection context (human cases, rats and shrews, pigs, molluscs, or environmental samples). Years represent the period of reported detection or outbreak.

8.2. rHEV in Animals

8.2.1. Rodents and Small Mammals

Despite reports showing the zoonotic transmission of rHEV, understanding how the spillover events occur remains a complex One Health puzzle [60,61]. Rodents, particularly *R. norvegicus*, remain the principal reservoir host of rHEV [62]. Epidemiological data from the 22 human cases reported in Hong Kong, China, showed that only 4 (18.2%) had seen a rodent around their residence or work environment [21].

A recent study in Kenya detected rHEV-like RNA in the African giant shrew (*Crocidura olivieri*) and black rat (*Rattus rattus*); the respective sequences shared 94.7% amino acid identity with rHEV infecting humans and phylogenetically matched the rHEV variant responsible for the clinical case in France [10]. While the virus linked to the DRC and Gabon falls under clade 1 [19], the Kenyan study suggests that multiple clades are already co-circulating in Africa [20]. However, confirming this narrative would require extensive surveillance across humans, animals, and the shared environment.

The unique ability of rHEV to infect multiple animal hosts around humans makes it an important pathogen (Table 1). The virus has been detected across a diverse group of mammalian hosts, including rodents, pigs [63], and multiple shrew species (*Suncus murinus* and *Bandicota indica*) [10,64] (Table 1). Although rHEV has been isolated from rodents, particularly *Rattus norvegicus*, confirmed human cases remain confined to a few countries, including Hong Kong, China (22) [18,27], Spain (16) [43,49,65], Chinese Mainland (7) [27], France (3) [43,66], Germany (1) [45], Canada (1) [19], and Thailand (1) [67].

Table 1. Global evidence of rHEV in animals and the environment from 2010 to 2026.

Location	Year	Source	Sample Type	No of Positive/Sample Size	Percentage (%)	Detection Method
Argentina	2026	Environment	Waste water	67/99	67.7	RT-PCR [52]
Brazil	2025	Mollusc	Mollusc from surface water	2/89	2.2	RT-PCR [68]
Cameroon	2025	Environment	Waste water	19/72	26.4	RT-PCR [29]
Chinese Mainland	2011–2012	*Bandicota indica*, *Rattus norvegicus*, *Rattus flavipectus*, *Rattus rattoides losea*	Sera	166/713 (IgG) 12/713 (rHEV RNA)	23.3 1.7	Serology and RT-PCR [69]
Chinese Mainland	2011–2012	*Suncus murinus*	Sera	27/260 (IgG) 5/260 (rHEV RNA)	10.4 1.9	RT-PCR and ELISA [69]
Finland	2018–2023	*Rattus norvegicus*	Liver	4/216	1.8	RT-PCR [24]
France	2023	Environment	Waste water	4/32	12.5	PCR [70]
Germany	2010	*Rattus norvegicus*	Liver	1/6	16.7	PCR [17]
Hong Kong, China	2019	*Rattus norvegicus*	Rectal swabs	7/186	3.8	RT-PCR [22]
Hungary	2017–2018	*Rattus norvegicus*	Faecal samples	1/88	1.1	RT-PCR [25]
Indonesia	2011–2012	*Rattus norvegicus*	Sera	21/116 (IgG) 17/116 (rHEV RNA)	18.1 14.7	RT-PCR, serology [71]
Italy	2019–2022	Environment	Waste water	68/155	43.9	RT-PCR [72]
Kenya	2025	*Crocidura olivieri* and *Rattus rattus*	Liver	N.A	N.A	RT-PCR [10]
Lithuania	2014–2017	*Rattus rattus* and *Rattus norvegicus*	Liver and pleural fluid	34/109 (IgG) 9/109 (rHEV RNA)	31.2 8.3	RT-qPCR [73]
Portugal	2020–2022	Environment	Waste water	11/11	100	RT-PCR [74]

Table 1. *Cont.*

Location	Year	Source	Sample Type	No of Positive/Sample Size	Percentage (%)	Detection Method
Romania	2023	*Rattus norvegicus*	Liver	9/69	17.3	RT-PCR [23]
Spain	2021–2023	Environment	Waste water	100/106	94.3	RT-PCR [75]
Spain	2022	*Sus scrofa domestica*	Faecal samples	44/387	11.4	RT-qPCR [63]
Sweden	2016–2018	Environment	Waste water	41/51	98	RT-PCR [28]
United Kingdom	2014–2016	*Rattus norvegicus*	Liver	8/61	13	RT-PCR [76]
USA	2012	*Rattus norvegicus* and *Rattus rattus*	Liver	34/446	7.6	RT-PCR [77]
Vietnam	2011	*Rattus tanezumi* *Rattus norvegicus*	Sera	29/139 (IgG) 1/139 (rHEV RNA)	20.9A 0.7	Serology and RT-PCR [78]

8.2.2. Swine, the Speculation That Needs to Be Verified

Foodborne transmission through undercooked pork is strongly established for bHEV in general [79], but direct rHEV-specific evidence is missing. The circulation of bHEV in domestic pigs has been documented in Nigeria. Owolodun et al. [30] reported a 76.7% prevalence. Furthermore, serological evidence of HEV in both pigs and pig handlers in an intensively managed farm has been recorded [31], underscoring the importance of surveillance among at-risk groups.

We hypothesise that domestic pigs from regions with significant swine populations may harbour rHEV, thereby serving as a secondary reservoir for zoonotic transmission to humans. This hypothesis needs to be substantiated, given that the virus has been detected in Spain, a country with the second-largest pig population after China [80]. This perspective is also supported by Rios-Muñoz et al. [63], who suggested that the biological susceptibility and reservoir status of swine for bHEV make them likely susceptible to rHEV. Notably, Spain, a country that has regions with notable human rHEV infections, has documented rHEV presence in domestic pig populations [63]. Whether this is a case of reverse zoonosis or infection from a rodent reservoir is yet to be determined.

Despite the Spanish discovery of rHEV in pig populations, the exact role of swine remains controversial. Experimental infection of domestic pigs with rHEV (*Sus scrofa domestica*) was successfully demonstrated by Yadav et al. [48]. However, an attempt to replicate this study failed to achieve the same result [81]. One of the studies from Spain that detected rHEV in rectal, faecal, and blood samples of farmed pigs recorded a prevalence of 10.9% [82], which aligns with 11.4% prevalence reported by Rios-Muñoz et al. [63]. Bezerra et al. [83] expressed scepticism over pigs' status as natural hosts or merely transient vectors [83]. They argued that pigs' tendency to prey on rodents directly or feed on a rodent-infested swill may have been responsible for the outcome. This caveat is supported by the high cycle threshold (C_t) observed by the real-time PCR, indicative of a low amount of target viral load. As a result, they suggested that the virus detected in the pigs' faeces may represent residual RNA and recommended that such findings be best corroborated by blood samples to confirm natural infection. More genomic data from studies on the role of pigs in rHEV transmission is required to provide more clarity on the matter. It is also important to share the findings of negative results, as this will shed more light on the subject and benefit future studies.

8.2.3. Pets and Stray Animals

Finally, emerging evidence suggests that pets such as cats and dogs harbour rHEV, highlighting their potential role in disease transmission. In a study on stray and companion animals (cats and dogs) in Hong Kong, Shun et al. [84] reported low seroprevalence levels [9/751 (1.2%) in dogs and 2/130 (1.5%) in cats] without detecting viral RNA. Similar findings on sympatric urban cats and dogs in Southern Spain showed that some cats and dogs are seropositive without direct detection of the virus [85]. This lack of detectable RNA may indicate that rHEV does not persist long enough in these groups of animals. Whether these animals are able to actively transmit the pathogen to human populations remains to be determined.

8.3. rHEV in the Environment

The use of wastewater for surveillance, known as wastewater-based epidemiology (WBE), is an essential tool for monitoring the trajectory of various infectious diseases. This approach has become effective in monitoring population health in almost real time and has been effective in reporting the spread of infectious pathogens in the past, such as SARS-CoV-2, serving as a sensitive early warning system for impending disease outbreaks and rapid hotspot detection [86]. Environmental monitoring for rHEV began in 2016, six years after the virus was first reported, although data on such studies were not published until 2024 [28]. Currently, a growing number of researchers are embracing the WBE framework in the surveillance of rHEV.

The focus on environmental transmission of disease has received a significant boost through the advocacy of the One Health Approach. Studies on the detection of rHEV in the environment have contributed effectively to understanding the spread of the pathogen. More data on the environmental monitoring of rHEV from wastewater and open surface water around the world has gained traction in recent years (Table 1), with documented studies emerging from Sweden, Norway, Spain, Brazil, Portugal, Cameroon, and recently Argentina [28,43]. For instance, the detection of rHEV in wastewater from Argentina indicates that the virus is actively circulating locally, either in the human population or among rodent reservoirs inhabiting sewage systems. In relation to surface water contamination, the detection of rHEV viral RNA in molluscs, as reported in Brazil [68], has significant public health implications, given that seafood is often consumed raw or undercooked [53,74]. Therefore, there is a need for active surveillance to detect potential hotspots of viral circulation and prevent foodborne exposure.

9. The Nigerian Ecological Landscape and Possible Drivers

While our understanding of rHEV in Nigeria is very limited, identifying possible environmental and anthropogenic drivers of viral spread can be modelled based on our understanding of its epidemiology, particularly where environmental or social-demographic conditions overlap. A preferred scenario would be to describe HEV drivers in a global South or sub-Saharan African setting. A more general approach that considers the principles of infection transmission in the context of the primary reservoir host (rodents), environmental transmission vectors (such as contaminated food/water), social determinants of health (including migration, lifestyle, and infrastructural deficiencies), and the compounding effects of climate change and regional insecurity/crises. Similar approaches were deployed for SARS-CoV-2, in which understanding of the pathogen and its transmission routes guided both pharmaceutical and non-pharmaceutical decisions before the index case was reported in Nigeria [87].

Rodent-borne pathogens are globally distributed, but human exposure varies with the level of interaction between humans and rodents across different environments, influenced

by how actively they come into contact. The Nigerian rodent ecosystem is shaped by natural biogeographical gradients that give rise to three zones: the southern rain forest, the central guinea savannah, and the northern savannah. Rodent distribution across these regions is driven by anthropogenic impacts such as land-use changes and food availability, which often fluctuate with seasonal rainfall [88]. These interacting factors determine species distributions and rodent population dynamics. A closer look reveals that the species *Mastomys natalensis*, the reservoir of Lassa fever virus, is common and found around human habitations and farm environments, where they contaminate farmed products and grains that are not properly stored. As a result, Lassa fever seasonal outbreaks are connected to the harvest season, which often coincides with the onset of the dry season in most endemic regions [89]. This rodent behaviour is common with most rodents and small mammals, as their sustenance is largely dependent on the age-long association with human habitations. The seasonal Lassa fever outbreaks suggest that there is a high frequency of human rodent interaction, as spill over increases with more human contacts. Other species of rodents in Nigeria include *Rattus rattus*, *Rattus norvegicus*, *Mus* spp., *Praomys* spp., *Lophuromys* spp., *Cricetomys gambianus* (African giant pouched rat) and small mammals such as *Crocidura* spp. (shrews) [90,91]. These rodents have a very broad distribution across all three major ecosystems.

Environmental and social determinants such as substandard housing infrastructure, poverty, culinary consumption of rodents, the poor sanitary conditions of conflict-induced internally displaced persons (IDP) camps, and recurrent flooding events may provide avenues for zoonotic spillover from rodents to humans. Studies have associated the spread of bHEV with crises and inadequate sanitation in IDP camps, notably in North-Eastern Nigeria and Sudan. Research indicates that a high prevalence of bHEV in these camps is primarily linked to individuals living in close quarters and poor sanitary and hygiene conditions [92–94]. Such conditions promote the interaction of humans and rodents, thereby promoting the spread of zoonotic diseases. There is also the preference for rodent bushmeat in some Nigerian cultures, where rodents such as the brown rats and the African Giant Pouched Rats (*Cricetomys* spp.) are hunted for nutritional and organoleptic qualities. As a result, more people in the bushmeat value chain are at risk of contracting zoonotic diseases common with rodents.

10. Research Gaps and Future Directions

Previous studies on Hepatitis E in animals in Nigeria are limited to bHEV. They showed evidence of the virus circulating mainly in rodents (*Rattus norvegicus*) and domestic animals such as pigs, goats, and sheep, highlighting the role animals play in HEV transmission [30,95]. In contrast, the ecology of rHEV in rodents from forested and peri-urban areas in Nigeria remains unexplored. Thus, a better understanding of the circulation of rHEV in wild and farm animals is essential to identify sources of zoonotic transmission and to initiate preventive measures reducing the risk of rHEV outbreaks in humans. Additionally, rodents in Nigeria represent a potential portal for transmitting zoonotic agents, such as Lassa fever and the monkeypox virus, from wildlife to humans [96].

We believe that rHEV may be spreading quietly but is not being reported in Nigeria due to the diagnostic gap in the healthcare system. This gap is shared across several African countries. National programmes for hepatitis testing and control in Nigeria have been limited to HBV and HCV. The 2018 National AIDS Indicator and Impact Survey (NAIIS) provided national prevalence estimates of HBV at 8.1% and HCV at 1.1%, offering the most recent comprehensive data available [97]. Also, the Hepatitis Evaluation to Amplify Testing (HEAT) project is focused on scaling up diagnostic capacity for testing laboratories to detect hepatitis B and C and eliminating these hepatotropic viruses by improving point-of-care

delivery and supporting national testing strategies [98]. These efforts show that HEV is not currently prioritised as a pathogen of concern. However, the involvement of rHEV as a comorbidity, particularly in the immunocompromised, begs for the need to incorporate rHEV testing in the current national plan.

The global distribution of *Rattus* spp. facilitates the global spread of the zoonotic pathogens that they harbour, as exemplified in hantavirus, paramyxovirus, and rotavirus [99–101]. This provides additional justification for the importance of rHEV surveillance from a Nigerian perspective. rHEV surveillance data in rodents could identify hotbeds, thereby improving risk communication in areas where human–rodent interaction is high. Surveillance could guide the activities of pest control departments in controlling rodent populations. It also has the potential of initiating further research into the ecology of the virus in Nigeria, alongside alerting public health authorities on the need to review testing protocols in testing laboratories, and possibly developing case definitions for the disease in a Nigerian context.

The synanthropic nature of *R. norvegicus* and *R. rattus* brings these reservoirs into close contact with humans in the domestic environment. Moreover, the ecological overlap among Nigeria, Cameroon, Gabon, DRC, and other countries in the region may highlight the importance of investigating herpesvirus diversity in wildlife populations and humans. The southern part of Nigeria shares contiguous rainforest ecosystems with the DRC, and has previously reported similar wildlife-borne rodent pathogens, such as the monkeypox virus [96].

To understand the environmental spread of rHEV in Nigeria and the wider African region, it is necessary to consider the unique housing settings and social structures, as a wastewater-based approach may be ineffective, given that residential areas are not typically designed for centralised waste collection, especially in rural centres where the interaction with rodents is likely high. To address this, infrastructural limitations to environmental sampling may take advantage of sampling from public spaces, effluents from communities, surface runoffs, hospitals, and septic tanks from public spaces such as stadiums and airports, including screening effluents from pig farms, the surrounding environments, and workers for the virus. Such innovations have been successfully conducted using discarded condoms to indicate/track community spread of mpox, in the 2022 global spread, when it became evident that the virus can be transferred through sexual intercourse [102].

There is a strong critical need to investigate the epidemiology of rHEV in sub-Saharan Africa, given that a confirmed travel-related human case is linked to the region. Future research should prioritise determining whether the virus is actively circulating within native rodents, humans, other animal species, and possibly the environment. Determining the rHEV status in Nigeria's rodents and contributing genomic data from Africa would deepen the understanding of rHEV diversity, transmission dynamics, and evolutionary patterns, while clarifying its regional public health significance. Furthermore, prospective studies must aim at identifying ecological hotspots, environmental variables, and socio-behavioural determinants that facilitate viral spillover and spread. Integrating these multisectoral surveillance approaches within the One Health framework will be essential to define the burden of disease, assess risks to vulnerable populations, and inform targeted prevention and control strategies.

11. Conclusions

From a Nigerian, but also global perspective, substantial gaps remain in our understanding of rat hepatitis E virus epidemiology, transmission dynamics, and clinical impact. Addressing these gaps is important given the expanding geographic detection of the virus and the close ecological association between rodent reservoirs and human populations. The

cosmopolitan distribution and synanthropic behaviour of rodents, together with evidence of multi-host infection and potential foodborne transmission, underscore the virus's public health relevance. Strengthening surveillance systems and diagnostic capacity in Nigeria and across sub-Saharan Africa will be critical to determine the true burden of rHEV, particularly among vulnerable populations. This may include expanding surveillance beyond rodents to include domestic animals such as pigs. Improved detection and characterisation of this underrecognized pathogen may not only inform hepatitis control strategies but also contribute to broader health system strengthening by enhancing preparedness for emerging zoonotic infections.

This review is not without limitations. As a narrative review focused on an emerging pathogen, there is the likelihood of selection bias in acquiring our data, which is an inherent constraint of narrative reviews as opposed to systematic or meta reviews. Additionally, data on rHEV in Nigeria and across Africa remain scarce; consequently, we extrapolated its epidemiological features and zoonotic risks from high burden regions and from its closest relative, bHEV.

Author Contributions: Conceptualization, D.K., C.A.M. and A.A.B.; methodology, D.K.; formal analysis, O.A.; investigation, D.K.; writing—original draft preparation, D.K.; writing—review and editing, C.A.M., O.A.O., D.O.O., A.A.B., D.S., N.S., and S.S.; visualisation, O.A. and D.S.; supervision, C.A.M. and D.S., S.S.; funding acquisition, D.K. All authors have read and agreed to the published version of the manuscript.

Funding: This research received no external funding.

Institutional Review Board Statement: Not applicable.

Data Availability Statement: No new data were created or analysed in this study. Data sharing is not applicable to this article.

Acknowledgments: The authors have reviewed and edited the output and take full responsibility for the content of this publication.

Conflicts of Interest: The authors declare no conflicts of interest.

References

1. WHO. Hepatitis E. 2025. Available online: https://www.who.int/news-room/fact-sheets/detail/hepatitis-e (accessed on 12 December 2025).
2. Kamar, N.; Izopet, J.; Pavio, N.; Aggarwal, R.; Labrique, A.; Wedemeyer, H.; Dalton, H.R. Hepatitis E virus infection. *Nat. Rev. Dis. Prim.* **2017**, *3*, 17086. [CrossRef] [PubMed]
3. Khuroo, M.S. Discovery of hepatitis E: The epidemic non-A, non-B hepatitis 30 years down the memory lane. *Virus Res.* **2011**, *161*, 3–14. [CrossRef] [PubMed]
4. Balayan, M.S.; Andjaparidze, A.G.; Savin Skaya, S.S.; Ketiladze, E.S.; Braginsky, D.M.; Suvinov, A.P.; Poleschuk, V.F. Evidence for a virus in Non-A, Non-B hepatitis transmitted via the fecal-oral route. *Intervirology* **1983**, *20*, 23–31. [CrossRef] [PubMed]
5. Castaneda, D.; Gonzalez, A.J.; Alomari, M.; Tandon, K.; Zervos, X.B. From hepatitis A to E: A critical review of viral hepatitis. *World J. Gastroenterol.* **2021**, *27*, 1691–1715. [CrossRef] [PubMed]
6. Arankalle, V.A.; Sreenivasan, M.A.; Popper, H.; Ticehurst, J.; Kapikian, A.Z.; Pavri, K.M.; Purcell, R.H. Aetiological association of a virus-like particle with enterically transmitted non-A, non-B hepatitis. *Lancet* **1988**, *331*, 550–554. [CrossRef] [PubMed]
7. Khuroo, M.S. Study of an epidemic of non-A, non-B hepatitis: Possibility of another human hepatitis virus distinct from post-transfusion non-A, non-B type. *Am. J. Med.* **1980**, *68*, 818–824. [CrossRef] [PubMed]
8. Arankalle, V.A.; Chadha, M.S.; Tsarev, S.A.; Emerson, S.U.; Risbud, A.R.; Banerjee, K.; Purcell, R.H. Seroepidemiology of water-borne hepatitis in India and evidence for a third enterically-transmitted hepatitis agent. *Proc. Natl. Acad. Sci. USA* **1994**, *91*, 3428–3432. [CrossRef] [PubMed]
9. Meng, X.J. Expanding Host Range and Cross-Species Infection of Hepatitis E Virus. *PLoS Pathog.* **2016**, *12*, e1005695. [CrossRef] [PubMed]
10. Nawenja, C.V.; Ochola, G.O.; Obanda, V.; Ommeh, S.; Yang, X.L.; Zhu, Y.; Li, B.; Deng, J.W.; Agwanda, B.; Hu, B. Genomic characterization of novel orthohepeviruses in shrews and rats from Kenya. *Microb. Genom.* **2025**, *11*, 001538. [CrossRef] [PubMed]

11. Wu, H.; Zhou, L.; Wang, F.; Chen, Z.; Lu, Y. Molecular epidemiology and phylogeny of the emerging zoonotic virus Rocahepevirus: A global genetic analysis. *Infect. Genet. Evol.* **2024**, *118*, 105557. [CrossRef] [PubMed]
12. Raj, V.S.; Smits, S.L.; Pas, S.D.; Provacia, L.B.; Moorman-Roest, H.; Osterhaus, A.D.; Haagmans, B.L. Novel hepatitis E virus in ferrets, the Netherlands. *Emerg. Infect. Dis.* **2012**, *18*, 1369–1370. [CrossRef] [PubMed]
13. Ryll, R.; Heckel, G.; Corman, V.M.; Drexler, J.F.; Ulrich, R.G. Genomic and spatial variability of a European common vole hepevirus. *Arch. Virol.* **2019**, *164*, 2671–2682. [CrossRef] [PubMed]
14. Wang, B.; Li, W.; Zhou, J.H.; Li, B.; Zhang, W.; Yang, W.H.; Pan, H.; Wang, L.X.; Bock, C.T.; Shi, Z.L.; et al. Chevrier's Field Mouse (*Apodemus chevrieri*) and Père David's Vole (*Eothenomys melanogaster*) in China Carry Orthohepeviruses that form Two Putative Novel Genotypes Within the Species Orthohepevirus C. *Virol. Sin.* **2018**, *33*, 44–58. [CrossRef] [PubMed]
15. Songtanin, B.; Molehin, A.J.; Brittan, K.; Manatsathit, W.; Nugent, K. Hepatitis E Virus Infections: Epidemiology, Genetic Diversity, and Clinical Considerations. *Viruses* **2023**, *15*, 1389. [CrossRef] [PubMed]
16. Shafat, Z.; Ahmed, A.; Parvez, M.K.; Parveen, S. Analysis of codon usage patterns in open reading frame 4 of hepatitis E viruses. *Beni-Suef Univ. J. Basic Appl. Sci.* **2022**, *11*, 65. [CrossRef] [PubMed]
17. Johne, R.; Heckel, G.; Plenge-Bönig, A.; Kindler, E.; Maresch, C.; Reetz, J.; Schielke, A.; Ulrich, R.G. Novel hepatitis E virus genotype in Norway rats, Germany. *Emerg. Infect. Dis.* **2010**, *16*, 1452–1455. [CrossRef] [PubMed]
18. Sridhar, S.; Yip, C.C.Y.; Wu, S.; Cai, J.; Zhang, A.J.X.; Leung, K.H.; Chung, T.W.H.; Chan, J.F.W.; Chan, W.M.; Teng, J.L.L.; et al. Rat hepatitis E virus as cause of persistent hepatitis after liver transplant. *Emerg. Infect. Dis.* **2018**, *24*, 2241–2250. [CrossRef] [PubMed]
19. Andonov, A.; Robbins, M.; Borlang, J.; Cao, J.; Hatchette, T.; Stueck, A.; Deschambault, Y.; Murnaghan, K.; Varga, J.; Johnston, L. Rat hepatitis E virus linked to severe acute hepatitis in an immunocompetent patient. *J. Infect. Dis.* **2019**, *220*, 951–955. [CrossRef] [PubMed]
20. Lo, K.H.Y.; Ho, S.F.S.; Shun, E.H.K.; Wu, S.; Yip, C.C.Y.; Situ, J.; Ip, J.D.; Chan, W.M.; Yin, F.; Li, Z.; et al. Enhanced surveillance, subtyping, and host adaptation analysis reveal genotype-wide zoonotic potential of rat hepatitis E virus. *J. Hepatol.* **2026**, *84*, 51–61. [CrossRef] [PubMed]
21. Situ, J.; Wong, T.C.; Wu, S.; Li, Z.; Shun, E.H.K.; Ho, S.F.S.; Yip, C.C.Y.; Lo, K.H.Y.; Tsoi, J.Y.H.; Ma, W.; et al. Epidemiology and clinical characteristics of rat hepatitis E virus infection in humans. *J. Infect.* **2026**, *92*, 106667. [CrossRef] [PubMed]
22. Sridhar, S.; Yip, C.C.Y.; Wu, S.; Chew, N.F.S.; Leung, K.H.; Chan, J.F.W.; Zhao, P.S.; Chan, W.M.; Poon, R.W.S.; Tsoi, H.W.; et al. Transmission of rat hepatitis E virus infection to humans in Hong Kong: A clinical and epidemiological analysis. *Hepatology* **2020**, *73*, 10–22. [CrossRef] [PubMed]
23. Porea, D.; Raileanu, C.; Crivei, L.A.; Gotu, V.; Savuta, G.; Pavio, N. First Detection of Hepatitis E Virus (*Rocahepevirus ratti* Genotype C1) in Synanthropic Norway Rats (*Rattus norvegicus*) in Romania. *Viruses* **2023**, *15*, 1337. [CrossRef] [PubMed]
24. Erdin, M.; Altan, E.; Suomalainen, N.; Alburkat, H.; Aivelo, T.; Sironen, T.; Smura, T. Genetic characterization of rat hepatitis E virus (*Rocahepevirus ratti*) in urban brown rats (*Rattus norvegicus*) in Helsinki, Finland. *Arch. Virol.* **2025**, *170*, 215. [CrossRef] [PubMed]
25. Reuter, G.; Boros, Á.; Pankovics, P. Review of Hepatitis E Virus in Rats: Evident Risk of Species Orthohepevirus C to Human Zoonotic Infection and Disease. *Viruses* **2020**, *12*, 1148. [CrossRef] [PubMed]
26. Chen, Z.; Wang, L.; Zhang, Y.; Li, G.; Yin, J.; Fan, J.; Liu, T.; Wu, H.; Huang, Y.; Huang, W.; et al. Substantial spillover burden of rat hepatitis E virus in humans. *Nat. Commun.* **2025**, *16*, 4038. [CrossRef] [PubMed]
27. Cui, X.; Situ, J.; Tang, T.; Li, Z.; Chen, D.; Ho, S.S.-F.; Chung, H.-L.; Wong, T.-C.; Liang, Y.; Deng, C.; et al. Prevalence of Rocahepevirus ratti (rat hepatitis E virus) in humans and rats in China. *JHEP Rep.* **2025**, *7*, 101370. [CrossRef] [PubMed]
28. Churqui, M.P.; Ghaleb, M.; Tunovic, T.; Frankal, M.; Enache, L.; Nyström, K.; Lagging, M.; Wang, H. High prevalence of hepatitis E and rat hepatitis E viruses in wastewater in Gothenburg, Sweden. *One Health* **2024**, *19*, 100882. [CrossRef] [PubMed]
29. Meta-Djomsi, D.; Atsama-Amougou, M.; Ngamaleu, M.R.; Godwe, C.; Maidadi-Foudi, M.; Tongo, M.; Fokam, J.; Kouanfack, C.; Ayouba, A. Molecular surveillance of hepatitis E virus in wastewater in Yaoundé, Cameroon. *PLoS ONE* **2025**, *20*, e0322765. [CrossRef] [PubMed]
30. Owolodun, O.A.; Gerber, P.F.; Giménez-Lirola, L.G.; Kwaga, J.K.P.; Opriessnig, T. First report of hepatitis E virus circulation in domestic pigs in Nigeria. *Am. J. Trop. Med. Hyg.* **2014**, *91*, 699–704. [CrossRef] [PubMed]
31. Clement, M.; Olumide, O.; Georgina, O.; David, O. Serological Evidence and Risk Factors Associated With Hepatitis E Virus Infection in Pigs and Human at an Intensive Piggery Complex, Lagos Nigeria. *J. Healthc. Commun.* **2016**, *1*, 1–5. [CrossRef]
32. Purdy, M.A.; Drexler, J.F.; Meng, X.J.; Norder, H.; Okamoto, H.; Van der Poel, W.H.M.; Reuter, G.; de Souza, W.M.; Ulrich, R.G.; Smith, D.B. ICTV Virus Taxonomy Profile: Hepeviridae 2022. *J. Gen. Virol.* **2022**, *103*, 1778. [CrossRef] [PubMed]
33. Taxon Details | ICTV. Available online: https://ictv.global/taxonomy/taxondetails?taxnode_id=202403667&taxon_name=Rocahepevirus%20ratti (accessed on 6 April 2026).
34. Sridhar, S.; Teng, J.L.L.; Chiu, T.H.; Lau, S.K.P.; Woo, P.C.Y. Hepatitis E virus genotypes and evolution: Emergence of camel hepatitis E variants. *Int. J. Mol. Sci.* **2017**, *18*, 869. [CrossRef] [PubMed]

35. Debing, Y.; Moradpour, D.; Neyts, J.; Gouttenoire, J. Update on hepatitis E virology: Implications for clinical practice. *J. Hepatol.* **2016**, *65*, 200–212. [CrossRef] [PubMed]
36. Agrawal, S.; Gupta, D.; Panda, S.K. The 3′ end of hepatitis E virus (HEV) genome binds specifically to the viral RNA-dependent RNA polymerase (RdRp). *Virology* **2001**, *282*, 87–101. [CrossRef] [PubMed]
37. Yin, X.; Ying, D.; Lhomme, S.; Tang, Z.; Walker, C.M.; Xia, N.; Zheng, Z.; Feng, Z. Origin, antigenicity, and function of a secreted form of ORF2 in hepatitis E virus infection. *Proc. Natl. Acad. Sci. USA* **2018**, *115*, 4773–4778. [CrossRef] [PubMed]
38. Nagashima, S.; Jirintai, S.; Takahashi, M.; Kobayashi, T.; Tanggis; Nishizawa, T.; Kouki, T.; Yashiro, T.; Okamoto, H. Hepatitis E virus egress depends on the exosomal pathway, with secretory exosomes derived from multivesicular bodies. *J. Gen. Virol.* **2014**, *95*, 2166–2175. [CrossRef] [PubMed]
39. Bai, H.; Ami, Y.; Suzaki, Y.; Doan, Y.H.; Muramatsu, M.; Li, T.C. Open reading frame 4 is not essential in the replication and infection of genotype 1 hepatitis E virus. *Viruses* **2023**, *15*, 784. [CrossRef] [PubMed]
40. Yamashita, T.; Mori, Y.; Miyazaki, N.; Cheng, R.H.; Yoshimura, M.; Unno, H.; Shima, R.; Moriishi, K.; Tsukihara, T.; Tian, C.L.; et al. Biological and immunological characteristics of hepatitis E virus-like particles based on the crystal structure. *Proc. Natl. Acad. Sci. USA* **2009**, *106*, 12986–12991. [CrossRef] [PubMed]
41. Benavent, S.; Carlos, S.; Reina, G. Rocahepevirus ratti as an Emerging Cause of Acute Hepatitis Worldwide. *Microorganisms* **2023**, *11*, 2996. [CrossRef] [PubMed]
42. Zhao, L.; Huang, Y. Evolution of rat hepatitis E virus: Recombination, divergence and codon usage bias. *Acta. Virol.* **2023**, *67*, 12031. [CrossRef]
43. Casares-Jimenez, M.; Rivero-Juarez, A.; Lopez-Lopez, P.; Montes, M.L.; Navarro-Soler, R.; Peraire, J.; Espinosa, N.; Alemán-Valls, M.R.; Garcia-Garcia, T.; Caballero-Gomez, J.; et al. Rat hepatitis E virus (*Rocahepevirus ratti*) in people living with HIV. *Emerg. Microbes Infect.* **2024**, *13*, 2295389. [CrossRef] [PubMed]
44. Mueller, L.J.; Schmidt, M.L.; Ciesek, S.; Corman, V.M.; Schwarz, T.; Best, T.D.; Bleicker, T.; Panajotov, J.; Zeuzem, N.; Jansen, J.; et al. Presence but low detection rate of rat hepatitis E virus in patients in Germany 2022–2024. *J. Hepatol.* **2025**, *83*, e146–e148. [CrossRef] [PubMed]
45. Rodriguez, C.; Marchand, S.; Sessa, A.; Cappy, P.; Pawlotsky, J.M. Orthohepevirus C hepatitis, an underdiagnosed disease? *J. Hepatol.* **2023**, *79*, e39–e41. [CrossRef] [PubMed]
46. Sridhar, S.; Yip, C.C.Y.; Lo, K.H.Y.; Wu, S.; Situ, J.; Chew, N.F.S.; Leung, K.H.; Chan, H.S.Y.; Wong, S.C.Y.; Leung, A.W.S.; et al. Hepatitis E virus species C infection in humans, Hong Kong. *Clin. Infect. Dis.* **2022**, *75*, 288–296. [CrossRef] [PubMed]
47. Kamar, N.; Marion, O.; Abravanel, F.; Izopet, J.; Dalton, H.R. Extrahepatic manifestations of hepatitis E virus. *Liver Int.* **2016**, *36*, 467–472. [CrossRef] [PubMed]
48. Yadav, K.K.; Boley, P.A.; Lee, C.M.; Khatiwada, S.; Jung, K.; Laocharoensuk, T.; Hofstetter, J.; Wood, R.; Hanson, J.; Kenney, S.P. Rat hepatitis E virus cross-species infection and transmission in pigs. *PNAS Nexus* **2024**, *3*, pgae259. [CrossRef] [PubMed]
49. Rivero-Juarez, A.; Frias, M.; Perez, A.B.; Pineda, J.A.; Reina, G.; Fuentes-Lopez, A.; Freyre-Carrillo, C.; Ramirez-Arellano, E.; Alados, J.C.; Rivero, A. Orthohepevirus C infection as an emerging cause of acute hepatitis in Spain: First report in Europe. *J. Hepatol.* **2022**, *77*, 326–331. [CrossRef] [PubMed]
50. Johne, R.; Plenge-Bönig, A.; Hess, M.; Ulrich, R.G.; Reetz, J.; Schielke, A. Detection of a novel hepatitis E-like virus in faeces of wild rats using a nested broad-spectrum RT-PCR. *J. Gen. Virol.* **2010**, *91*, 750–758. [CrossRef] [PubMed]
51. Gherlan, G.S. Rocahepevirus ratti: An underrecognised cause of acute hepatitis. *World J. Hepatol.* **2024**, *16*, 1084–1090. [CrossRef] [PubMed]
52. Filoni, B.; Lucero, M.E.; Di Cola, G.; Fantilli, A.; Roccia, A.; Sicilia, P.; Luque, L.; Cachi, A.; de los Ángeles Marinzalda, M.; Castro, G.; et al. Evidence of Rat Hepatitis E Virus Circulation through Wastewater Surveillance, Central Argentina. *Emerg. Infect. Dis.* **2026**, *32*, 133–136. [CrossRef] [PubMed]
53. Santos-Silva, S.; Gonçalves, H.M.R.; Van der Poel, W.H.M.; Nascimento, M.S.J.; Mesquita, J.R. Rat Hepatitis E Virus (*Rocahepevirus ratti*): A Systematic Review of Its Presence in Water, Food-Related Matrices, and Potential Risks to Human Health. *Foods* **2025**, *14*, 2533. [CrossRef] [PubMed]
54. Sridhar, S.; Wu, S.; Yip, C.; Shun, E.H.-K.; Wong, T.C.; Ng, P.Y.; Li, Z.; Situ, J.; Ho, S. P-1842. Clinical Characteristics of Rat Hepatitis E Virus (*Rocahepevirus ratti*) Infection: An emerging agent of viral hepatitis in humans. *Open Forum Infect. Dis.* **2026**, *13*, ofaf695.2011. [CrossRef]
55. Wu, S.; Chew, N.F.S.; Ma, X.; Situ, J.; Shun, E.H.K.; Li, C.; Ip, J.D.; Ho, S.F.S.; Zhang, A.J.; Tsoi, J.Y.H.; et al. Molnupiravir is effective against hepatitis E virus infection in an animal model. *Hepatol. Commun.* **2026**, *10*, e0944. [CrossRef] [PubMed]
56. Bordier, M.; Uea-Anuwong, T.; Binot, A.; Hendrikx, P.; Goutard, F.L. Characteristics of One Health surveillance systems: A systematic literature review. *Prev. Vet. Med.* **2020**, *181*, 104560. [CrossRef] [PubMed]
57. Ghai, R.R.; Wallace, R.M.; Kile, J.C.; Shoemaker, T.R.; Vieira, A.R.; Negron, M.E.; Shadomy, S.V.; Sinclair, J.R.; Goryoka, G.W.; Salyer, S.J.; et al. A generalizable one health framework for the control of zoonotic diseases. *Sci. Rep.* **2022**, *12*, 8588. [CrossRef] [PubMed]

58. Ayobami, O.; Mark, G.; Kadri-Alabi, Z.; Achi, C.R.; Jacob, J.C. COVID-19: An opportunity to re-evaluate the implementation of a One Health approach to tackling emerging infections in Nigeria and other sub-Saharan African countries. *J. Egypt. Public Health Assoc.* **2021**, *1*, 26. [CrossRef] [PubMed]
59. Dinkelborg, K.; Lhomme, S.; Gömer, A. Rat hepatitis E virus: An emerging challenge in human hepatitis. *J. Hepatol.* **2026**, *84*, 10–12. [CrossRef] [PubMed]
60. Jiménez De Oya, N.; De Blas, I.; Blázquez, A.B.; Martín-Acebes, M.A.; Halaihel, N.; Gironés, O.; Saiz, J.C.; Escribano-Romero, E. Widespread distribution of hepatitis E virus in Spanish pig herds. *BMC Res. Notes* **2011**, *4*, 412. [CrossRef] [PubMed]
61. Widén, F.; Sundqvist, L.; Matyi-Toth, A.; Metreveli, G.; Belák, S.; Hallgren, G.; Norder, H. Molecular epidemiology of hepatitis E virus in humans, pigs and wild boars in Sweden. *Epidemiol. Infect.* **2011**, *139*, 361–371. [CrossRef] [PubMed]
62. Ryll, R.; Bernstein, S.; Heuser, E.; Schlegel, M.; Dremsek, P.; Zumpe, M.; Wolf, S.; Pépin, M.; Bajomi, D.; Müller, G.; et al. Detection of rat hepatitis E virus in wild Norway rats (*Rattus norvegicus*) and Black rats (*Rattus rattus*) from 11 European countries. *Vet. Microbiol.* **2017**, *208*, 58–68. [CrossRef] [PubMed]
63. Rios-Muñoz, L.; Gonzálvez, M.; Caballero-Gomez, J.; Castro-Scholten, S.; Casares-Jimenez, M.; Agulló-Ros, I.; Corona-Mata, D.; García-Bocanegra, I.; Lopez-Lopez, P.; Fajardo, T.; et al. Detection of rat hepatitis E virus in pigs, Spain, 2023. *Emerg. Infect. Dis.* **2024**, *30*, 823–826. [CrossRef] [PubMed]
64. Guan, D.; Li, W.; Su, J.; Fang, L.; Takeda, N.; Wakita, T.; Li, T.C.; Ke, C. Asian Musk Shrew as a Reservoir of Rat Hepatitis E Virus, China. *Emerg. Infect. Dis.* **2013**, *19*, 1341. [CrossRef] [PubMed]
65. Caballero-Gómez, J.; Pereira, S.; Rivero-Calle, I.; Perez, A.B.; Viciana, I.; Casares-Jiménez, M.; Rios-Muñoz, L.; Rivero-Juarez, A.; Aguilera, A.; Rivero, A. Acute Hepatitis in Children Due to Rat Hepatitis E Virus. *J. Pediatr.* **2024**, *273*, 114125. [CrossRef] [PubMed]
66. Fourgeaud, J.; Veyrenche, N.; Laloum, I.; Jais, J.-P.; Roger, C.; Rabant, M.; Mallet, V.; Beaufrère, A.; Fontaine, H.; Leruez-Ville, M.; et al. Occult rat Hepatitis E Virus Infection as a Cause of Cirrhosis and Post-Transplant Recurrence: Insights into the Role of Metagenomics. *Am. J. Transplant.* **2026**, *26*, 1491–1494. [CrossRef] [PubMed]
67. Yamaguchi, J.; Orf, G.S.; Perez, L.J.; Phoompoung, P.; Chirakarnjanakorn, S.; Suputtamongkol, Y.; Cloherty, G.A.; Berg, M.G. First Evidence of Spillover of Rocahepevirus ratti Into Humans in Thailand. *Transbound. Emerg. Dis.* **2025**, *2025*, 9954682. [CrossRef] [PubMed]
68. Figueiredo, A.S.; Negreiros, I.R.; do Nascimento e Silva, A.; Salgado, C.R.S.; dos Santos, N.L.; Pinto, M.A.; de Carvalho Neta, A.V.; Leite, J.P.G.; Cantelli, C.P. Detection of Rocahepevirus ratti in Bivalve Mollusks from São Luís Island, Maranhão, Brazil: A Potential Transmission Route of an Emerging Zoonotic Pathogen? *Food Environ. Virol.* **2025**, *17*, 11. [CrossRef] [PubMed]
69. Li, W.; Guan, D.; Su, J.; Takeda, N.; Wakita, T.; Li, T.C.; Ke, C.W. High prevalence of rat hepatitis E virus in wild rats in China. *Vet Microbiol.* **2013**, *165*, 275–280. [CrossRef] [PubMed]
70. Rouba, A.; Ansmant, T.; Chaqroun, A.; Challant, J.; Josse, T.; Schvoerer, E.; Gantzer, C.; Bertrand, I.; Hartard, C. First detection of Hepatitis E virus (*Rocahepevirus ratti*) in French urban wastewater: Potential implications for human contamination. *Sci. Total Environ.* **2024**, *954*, 176805. [CrossRef] [PubMed]
71. Mulyanto; Depamede, S.N.; Sriasih, M.; Takahashi, M.; Nagashima, S.; Jirintai, S.; Nishizawa, T.; Okamoto, H. Frequent detection and characterization of hepatitis E virus variants in wild rats (*Rattus rattus*) in Indonesia. *Arch. Virol.* **2012**, *158*, 87–96. [CrossRef] [PubMed]
72. Palombieri, A.; Di Profio, F.; Sarchese, V.; Fruci, P.; Suffredini, E.; Martella, V.; Veneri, C.; Bonanno Ferraro, G.; Mancini, P.; La Rosa, G.; et al. Surveillance for rat hepatitis E in wastewater networks, Italy. *Microbiol. Spectr.* **2023**, *11*, e0267523. [CrossRef] [PubMed]
73. Simanavicius, M.; Juskaite, K.; Verbickaite, A.; Jasiulionis, M.; Tamosiunas, P.L.; Petraityte-Burneikiene, R.; Zvirbliene, A.; Ulrich, R.G.; Kucinskaite-Kodze, I. Detection of rat hepatitis E virus, but not human pathogenic hepatitis E virus genotype 1–4 infections in wild rats from Lithuania. *Vet. Microbiol.* **2018**, *221*, 129–133. [CrossRef] [PubMed]
74. Santos-Silva, S.; Lois, M.; Machado, A.; Bordalo, A.; Cruz, A.V.S.; Gonçalves, H.M.R.; Van der Poel, W.H.M.; Nascimento, M.S.J.; Rivero-Juarez, A.; Romalde, J.L.; et al. Environmental Surveillance of Hepatitis E Virus and Rat Hepatitis E Virus in Portugal and Spain, 2020–2022. *J. Med. Virol.* **2025**, *97*, e70414. [CrossRef] [PubMed]
75. Casares-Jimenez, M.; Garcia-Garcia, T.; Suárez-Cárdenas, J.M.; Perez-Jimenez, A.B.; Martín, M.A.; Caballero-Gómez, J.; Michán, C.; Corona-Mata, D.; Risalde, M.A.; Perez-Valero, I.; et al. Correlation of hepatitis E and rat hepatitis E viruses urban wastewater monitoring and clinical cases. *Sci. Total Environ.* **2024**, *908*, 168203. [CrossRef] [PubMed]
76. Murphy, E.G.; Williams, N.J.; Jennings, D.; Chantrey, J.; Verin, R.; Grierson, S.; McElhinney, L.M.; Bennett, M. First detection of Hepatitis E virus (Orthohepevirus C) in wild brown rats (*Rattus norvegicus*) from Great Britain. *Zoonoses Public Health* **2019**, *66*, 686–694. [CrossRef] [PubMed]
77. Lack, J.B.; Volk, K.; Van Den Bussche, R.A. Hepatitis E virus genotype 3 in wild rats, United States. *Emerg. Infect. Dis.* **2012**, *18*, 1268–1273. [CrossRef] [PubMed]

78. Li, T.C.; Yoshimatsu, K.; Yasuda, S.P.; Arikawa, J.; Koma, T.; Kataoka, M.; Ami, Y.; Suzaki, Y.; Mai, L.T.Q.; Hoa, N.T.; et al. Characterization of self-assembled virus-like particles of rat hepatitis E virus generated by recombinant baculoviruses. *J. Gen. Virol.* **2011**, *92*, 2830–2837. [CrossRef] [PubMed]
79. Pavio, N.; Merbah, T.; Thébault, A. Frequent Hepatitis E Virus Contamination in Food Containing Raw Pork Liver, France. *Emerg. Infect. Dis.* **2014**, *20*, 1925–1927. [CrossRef] [PubMed]
80. Pig Population by Country (2025 Rankings). Available online: https://worldostats.com/country-stats/pig-population-by-country/ (accessed on 26 February 2026).
81. Cossaboom, C.M.; Córdoba, L.; Sanford, B.J.; Piñeyro, P.; Kenney, S.P.; Dryman, B.A.; Wang, Y.; Meng, X.J. Cross-species infection of pigs with a novel rabbit, but not rat, strain of hepatitis E virus isolated in the United States. *J. Gen. Virol.* **2012**, *93*, 1687–1695. [CrossRef] [PubMed]
82. Caballero-Gómez, J.; García-Bocanegra, I.; Cano-Terriza, D.; Casares-Jiménez, M.; Jiménez-Ruiz, S.; Risalde, M.A.; Ríos-Muñoz, L.; Rivero-Juárez, A.; Rivero, A. Zoonotic rat hepatitis E virus infection in pigs: Farm prevalence and public health relevance. *Porc. Health Manag.* **2025**, *11*, 34. [CrossRef] [PubMed]
83. Bezerra, M.F.; da Paz, M.G.O.; de Oliveira-Filho, E.F.; de Souza Reis, C.R. Transmission and Surveillance of Rat Hepatitis E Virus in Swine. *Emerg. Infect. Dis.* **2024**, *30*, 1739. [CrossRef] [PubMed]
84. Shun, E.H.K.; Situ, J.; Tsoi, J.Y.H.; Wu, S.; Cai, J.; Lo, K.H.Y.; Chew, N.F.S.; Li, Z.; Poon, R.W.S.; Teng, J.L.L.; et al. Rat hepatitis E virus (*Rocahepevirus ratti*) exposure in cats and dogs, Hong Kong. *Emerg. Microbes Infect.* **2024**, *13*, 2337671. [CrossRef] [PubMed]
85. Caballero-Gómez, J.; Rivero-Juarez, A.; Jurado-Tarifa, E.; Jiménez-Martín, D.; Jiménez-Ruiz, E.; Castro-Scholten, S.; Ulrich, R.G.; López-López, P.; Rivero, A.; García-Bocanegra, I. Serological and molecular survey of hepatitis E virus in cats and dogs in Spain. *Transbound. Emerg. Dis.* **2022**, *69*, 240–248. [CrossRef] [PubMed]
86. Bowes, D.A.; Driver, E.M.; Choi, P.M.; Barcelo, D.; Beamer, P.I. Wastewater-based epidemiology to assess environmentally influenced disease. *J. Expo. Sci. Environ. Epidemiol.* **2024**, *34*, 387–388. [CrossRef] [PubMed]
87. Kabantiyok, D.; Ninyio, N.; Shittu, I.; Meseko, C.; Emeto, T.I.; Adegboye, O.A. Human Respiratory Infections in Nigeria: Influenza and the Emergence of SARS-CoV-2 Pandemic. *Vaccines* **2022**, *10*, 1551. [CrossRef] [PubMed]
88. Olayemi, A.; Obadare, A.; Oyeyiola, A.; Fasogbon, S.; Igbokwe, J.; Igbahenah, F.; Ortsega, D.; Günther, S.; Verheyen, E.; Fichet-Calvet, E. Small mammal diversity and dynamics within Nigeria, with emphasis on reservoirs of the lassa virus. *Syst. Biodivers.* **2017**, *16*, 118–127. [CrossRef]
89. Fichet-Calvet, E.; Lecompte, E.; Koivogui, L.; Soropogui, B.; Doré, A.; Kourouma, F.; Sylla, O.; Daffis, S.; Koulémou, K.; Ter Meulen, J. Fluctuation of Abundance and Lassa Virus Prevalence in Mastomys natalensis in Guinea, West Africa. *Vector-Borne Zoonotic Dis.* **2007**, *7*, 119–128. [CrossRef] [PubMed]
90. Ayinde, B.H.; Adefoluke, A.A. Ecological survey of small mammal species composition and abundance in selected vegetation within the University of Ibadan premises, Southwest Nigeria. *Ethiop. J. Appl. Sci. Technol.* **2024**, *15*, 12–24.
91. Iyawe, J.G. Distribution of small rodents and shrews in a lowland rain forest zone of Nigeria, with observations on their reproductive biology. *Afr. J. Ecol.* **1988**, *26*, 189–195. [CrossRef]
92. Adedeji, A.; Nnaji, I.; Muhammad, F.; Amaza, R.; Adewusi, A.; Ojo, J.; Ojenya, E.; Mustapha, A.; Gassi, S.; Klink, P.; et al. Seroprevalence patterns of viral hepatitis B, C, and E among internally displaced persons in Borno State, Nigeria. *IJID Reg.* **2024**, *13*, 100481. [CrossRef] [PubMed]
93. Desai, A.N.; Mohareb, A.M.; Elkarsany, M.M.; Desalegn, H.; Madoff, L.C.; Lassmann, B. Viral Hepatitis E Outbreaks in Refugees and Internally Displaced Populations, sub-Saharan Africa, 2010–2020. *Emerg. Infect. Dis.* **2022**, *28*, 1074–1076. [CrossRef] [PubMed]
94. Azman, A.S.; Bouhenia, M.; Iyer, A.S.; Rumunu, J.; Laku, R.L.; Wamala, J.F.; Rodriguez-Barraquer, I.; Lessler, J.; Gignoux, E.; Luquero, F.J.; et al. High Hepatitis E Seroprevalence Among Displaced Persons in South Sudan. *Am. J. Trop. Med. Hyg.* **2017**, *96*, 1296–1301. [CrossRef] [PubMed]
95. Osanyinlusi, S.A.; Salu, O.B.; James, A.B.; Orenolu, R.M.; Omilabu, S.A. Molecular Detection of Hepatitis E Virus in Rattus norvegicus in Lagos, Nigeria. *Niger. J. Microbiol.* **2020**, *34*, 5197–5203.
96. Meseko, C.; Adedeji, A.; Shittu, I.; Obishakin, E.; Nanven, M.; Suleiman, L.; Okomah, D.; Tyakaray, V.; Kolade, D.; Yinka-Ogunleye, A.; et al. Orthopoxvirus infections in rodents, Nigeria, 2018–2019. *Emerg. Infect. Dis.* **2023**, *29*, 433–434. [CrossRef] [PubMed]
97. Aliyu, G.G.; Aliyu, S.H.; Ehoche, A.; Dongarwar, D.; Yusuf, R.A.; Aliyu, M.H.; Salihu, H.M. The Burden of HIV, Hepatitis B and Hepatitis C by Armed Conflict Setting: The Nigeria AIDS Indicator and Impact Survey, 2018. *Ann. Glob. Health* **2021**, *87*, 53. [CrossRef] [PubMed]
98. Nigeria HEAT Project | CGHE. Available online: https://www.globalhep.org/projects-research/hepatitis-evaluation-amplify-testing-project/nigeria-heat-project (accessed on 7 June 2026).

99. Firth, C.; Bhat, M.; Firth, M.A.; Williams, S.H.; Frye, M.J.; Simmonds, P.; Conte, J.M.; Ng, J.; Garcia, J.; Bhuva, N.P.; et al. Detection of zoonotic pathogens and characterization of novel viruses carried by commensal Rattus norvegicus in New York City. *MBio* **2014**, *5*, e01933-14. [CrossRef] [PubMed]
100. Sasaki, M.; Muleya, W.; Ishii, A.; Orba, Y.; Hang'ombe, B.M.; Mweene, A.S.; Moonga, L.; Thomas, Y.; Kimura, T.; Sawa, H. Molecular epidemiology of paramyxoviruses in Zambian wild rodents and shrews. *J. Gen. Virol.* **2014**, *95*, 325–330. [CrossRef] [PubMed]
101. Milholland, M.T.; Castro-Arellano, I.; Suzán, G.; Garcia-Peña, G.E.; Lee, T.E.; Rohde, R.E.; Alonso Aguirre, A.; Mills, J.N. Global Diversity and Distribution of Hantaviruses and Their Hosts. *EcoHealth* **2018**, *15*, 163–208. [CrossRef] [PubMed]
102. Wannigama, D.L.; Amarasiri, M.; Phattharapornjaroen, P.; Hurst, C.; Modchang, C.; Besa, J.J.V.; Miyanaga, K.; Cui, L.; Fernandez, S.; Huang, A.T.; et al. Community-based mpox and sexually transmitted disease surveillance using discarded condoms in the global south. *Lancet Infect. Dis.* **2024**, *24*, e610–e613. [CrossRef] [PubMed]

Disclaimer/Publisher's Note: The statements, opinions and data contained in all publications are solely those of the individual author(s) and contributor(s) and not of MDPI and/or the editor(s). MDPI and/or the editor(s) disclaim responsibility for any injury to people or property resulting from any ideas, methods, instructions or products referred to in the content.